Odin

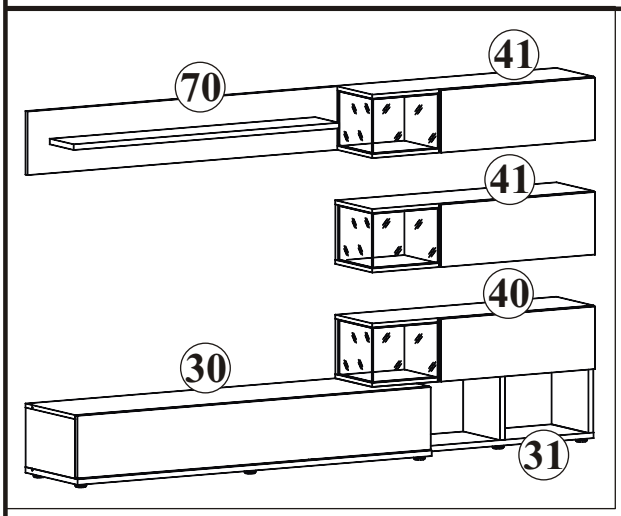

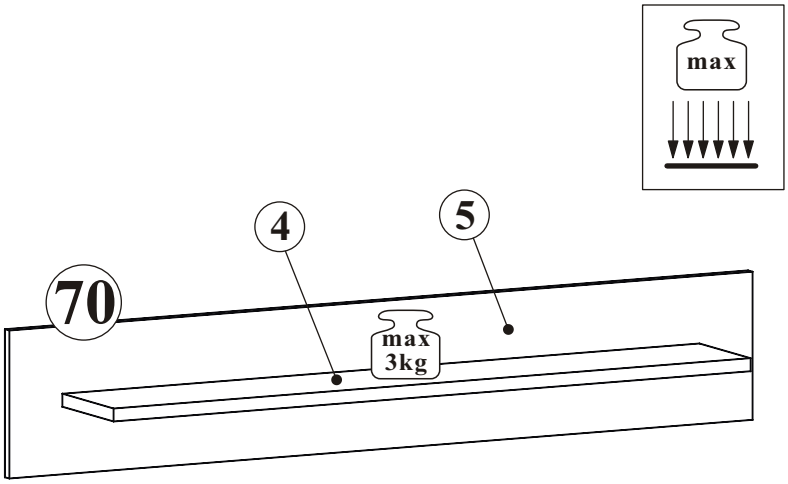

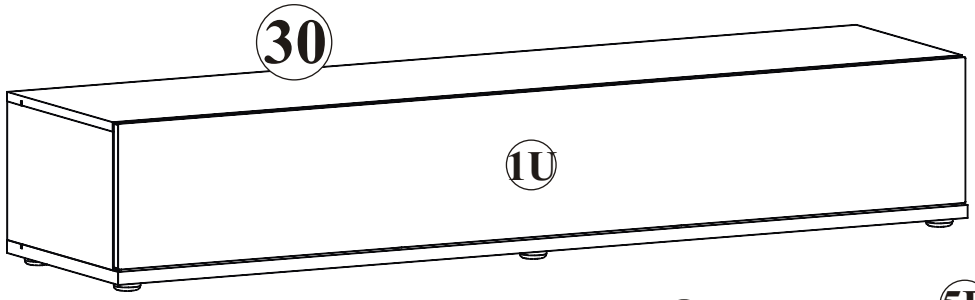

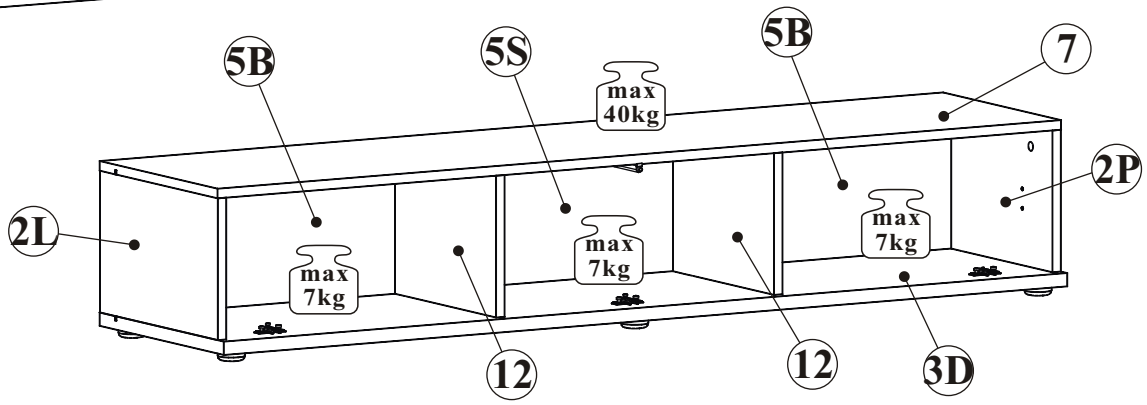

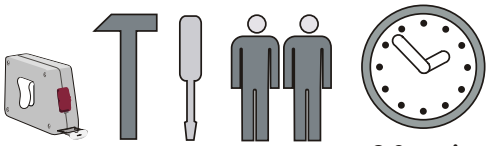

90 min

NO	Dim.			Col.-No	Qty
1U	1596	246	16	1 / 3.	1
2L	234	380	16	1 / 3.	1
12	234	326	16	1 / 3.	2
2P	234	380	16	1 / 3.	1
3D	1600	400	22	1 / 3.	1
5B	246	526	3	1 / 3.	2
5S	246	527	3	1 / 3.	1
7	1600	380	16	1 / 3.	1
4	1200	184	22	1 / 3.	1
5	1400	250	16	1 / 3.	1

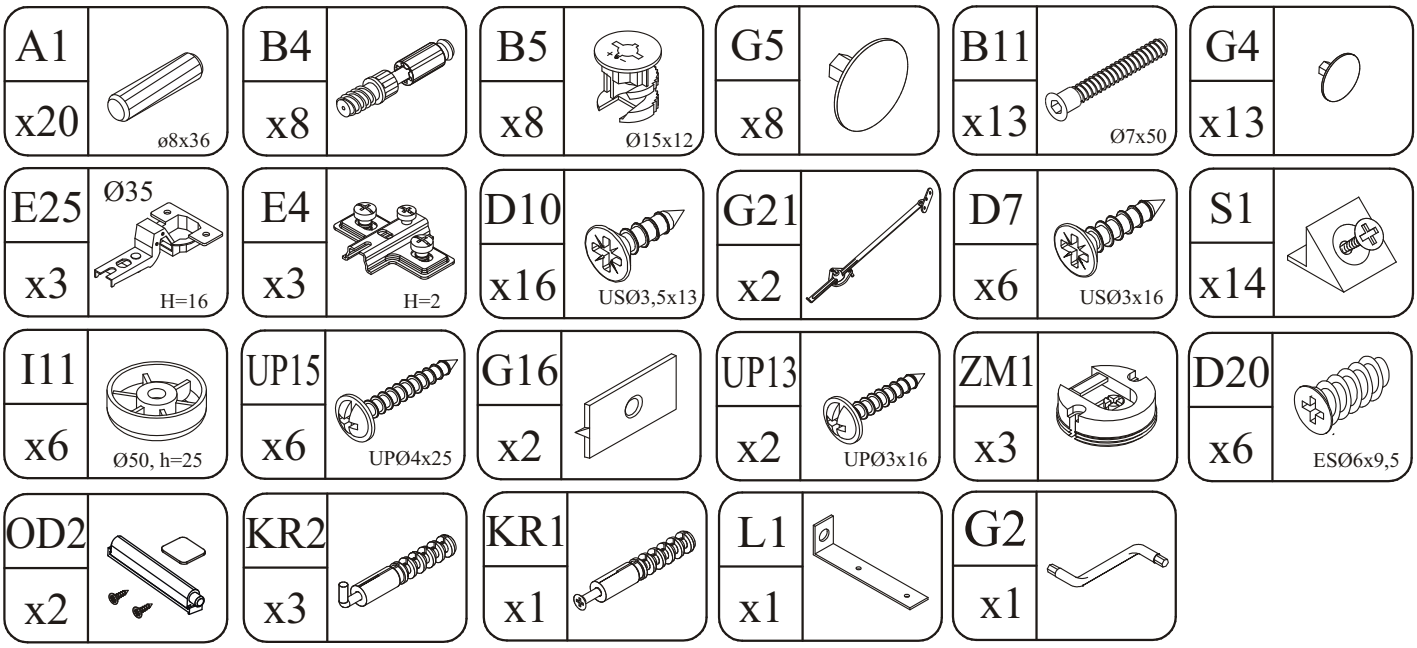
A1
x20
ø8x36
B4
x8
B5
x8
Ø15x12
G5
x8
B11
x13
Ø7x50
G4
x13
E25
x3
Ø35
H=16
E4
x3
H=2
D10
x16
USØ3,5x13
G21
x2
D7
x6
USØ3x16
S1
x14
I11
x6
Ø50, h=25
UP15
x6
UPØ4x25
G16
x2
UP13
x2
UPØ3x16
ZM1
x3
D20
x6
ESØ6x9,5
OD2
x2
KR2
x3
KR1
x1
L1
x1
G2
x1
0 mm 10 20 30 40 50 60

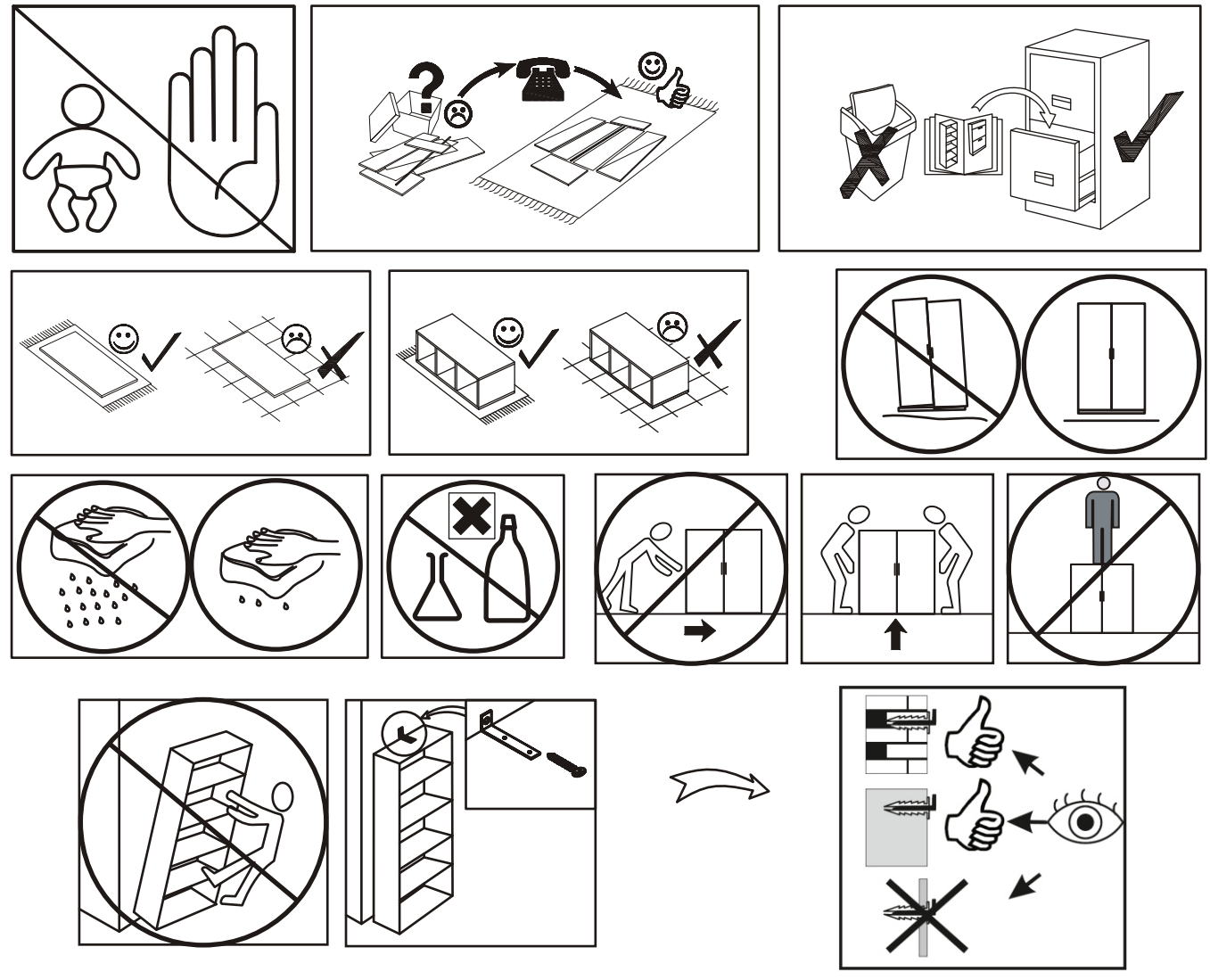

70

1 - 4

30

5 - 15

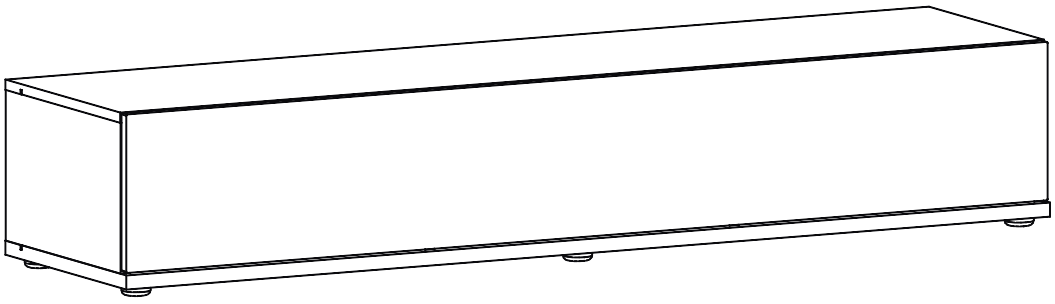

1

ZM1 x3

D20 x6 ESØ6x9,5

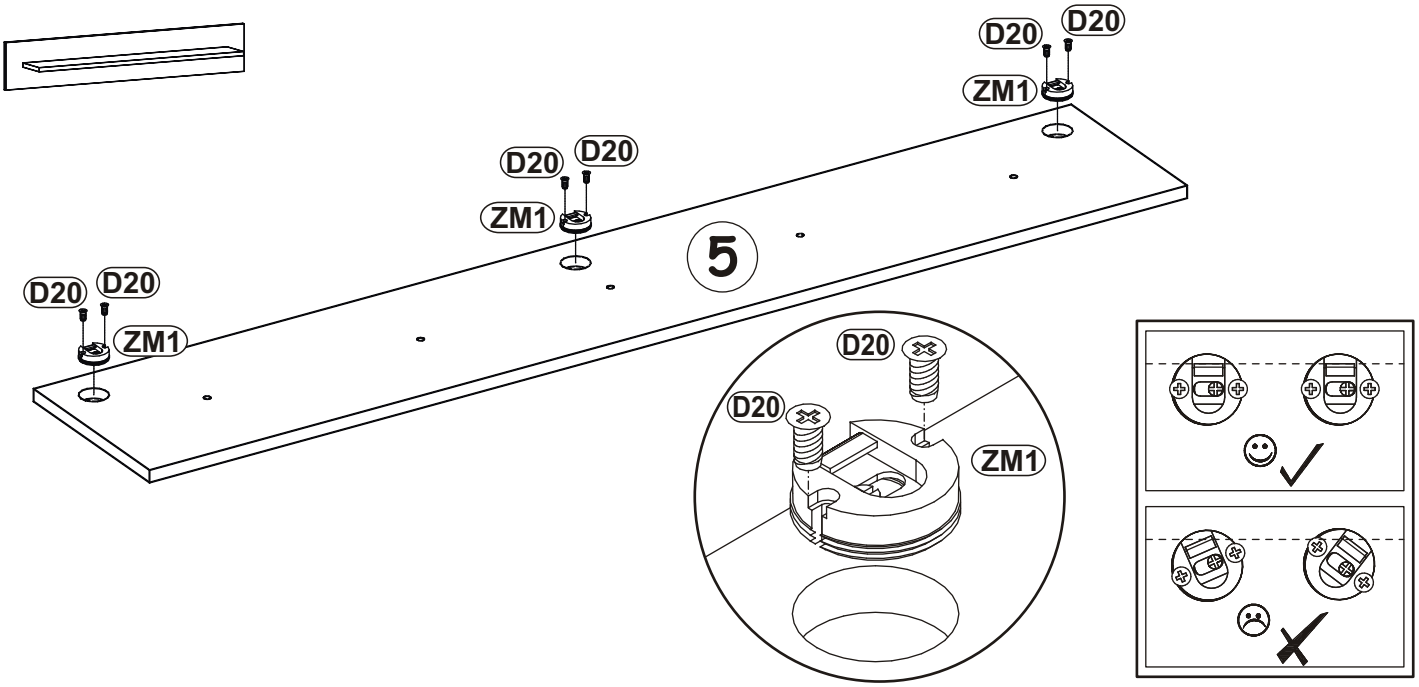

2

A1 x4 ø8x36

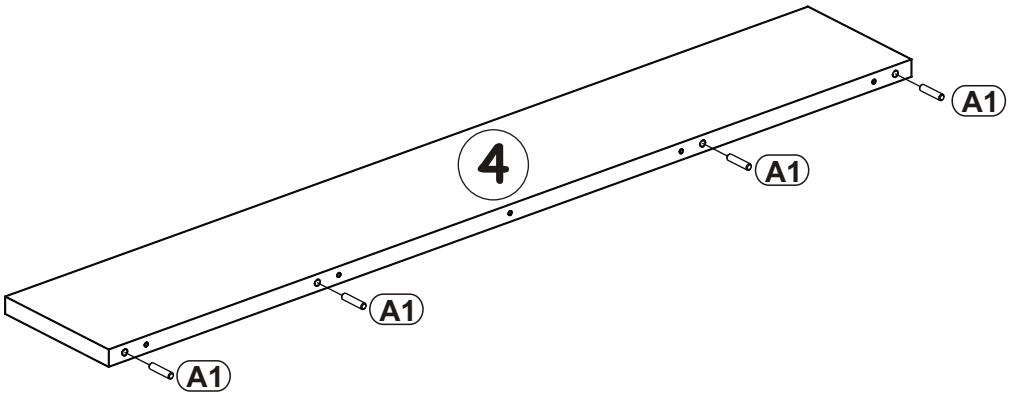

3

B11 x5 Ø7x50

G4 x5

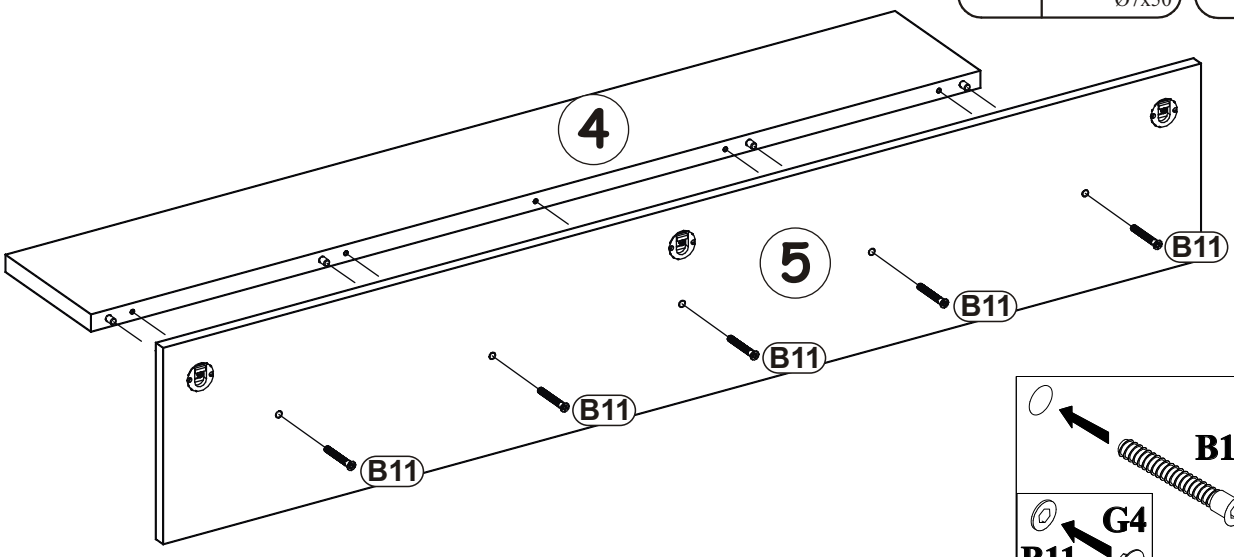

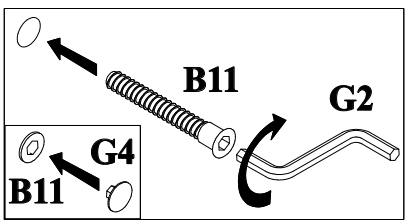

4

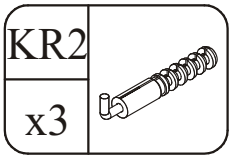

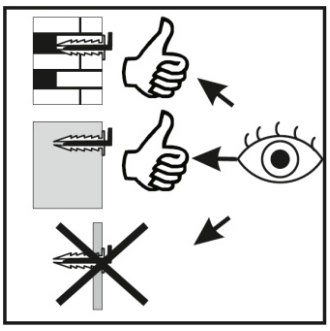

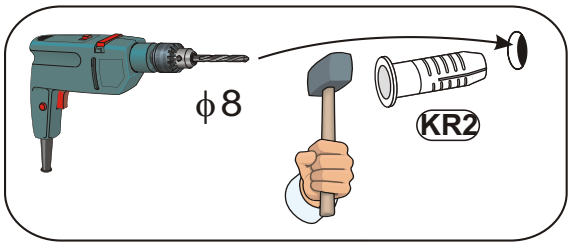

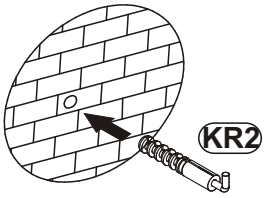

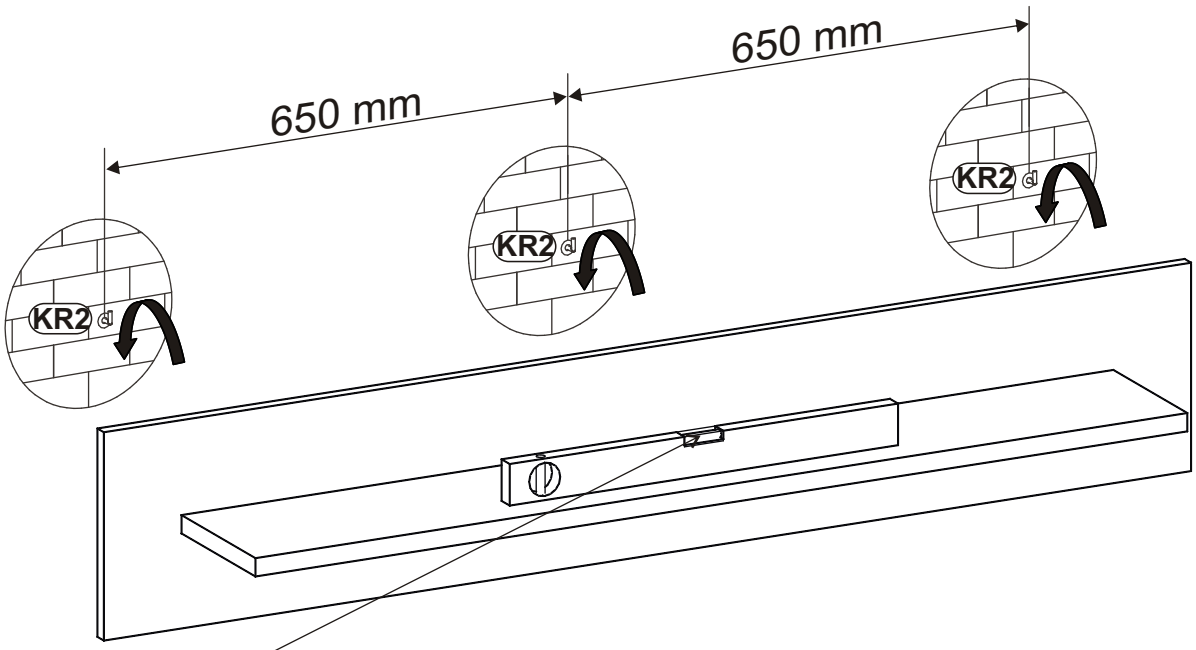

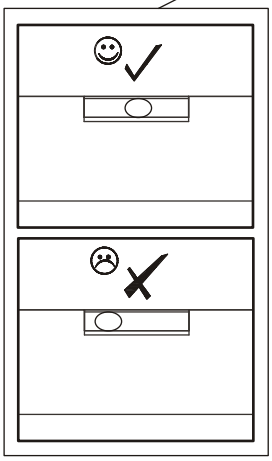

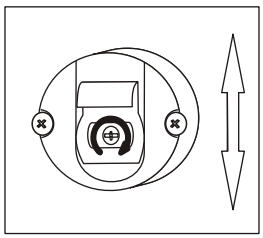

5

A1	
x8	ø8x36

B5	
x4	Ø15x12

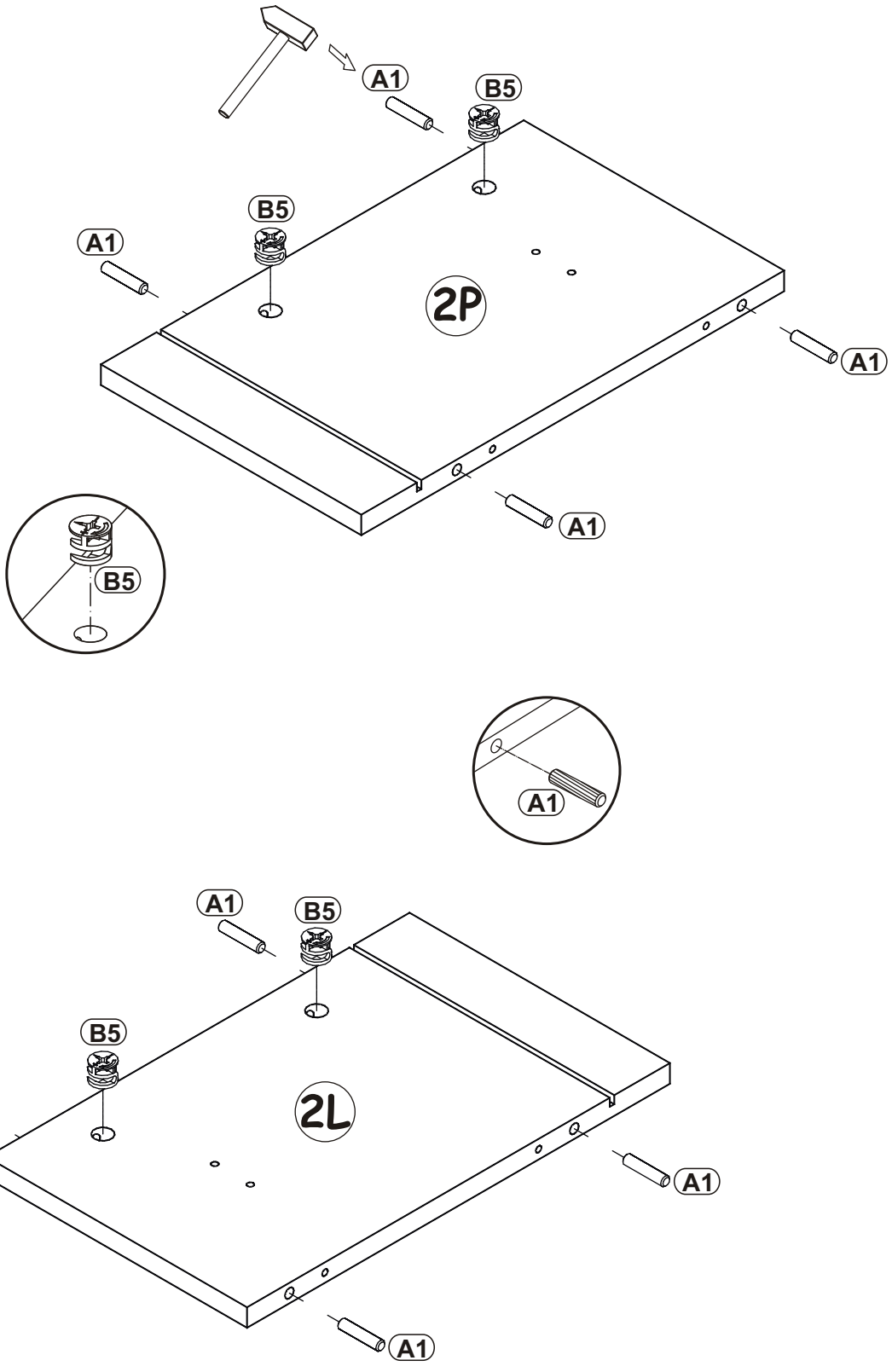

6

A1	
x8	ø8x36

B5	
x4	Ø15x12

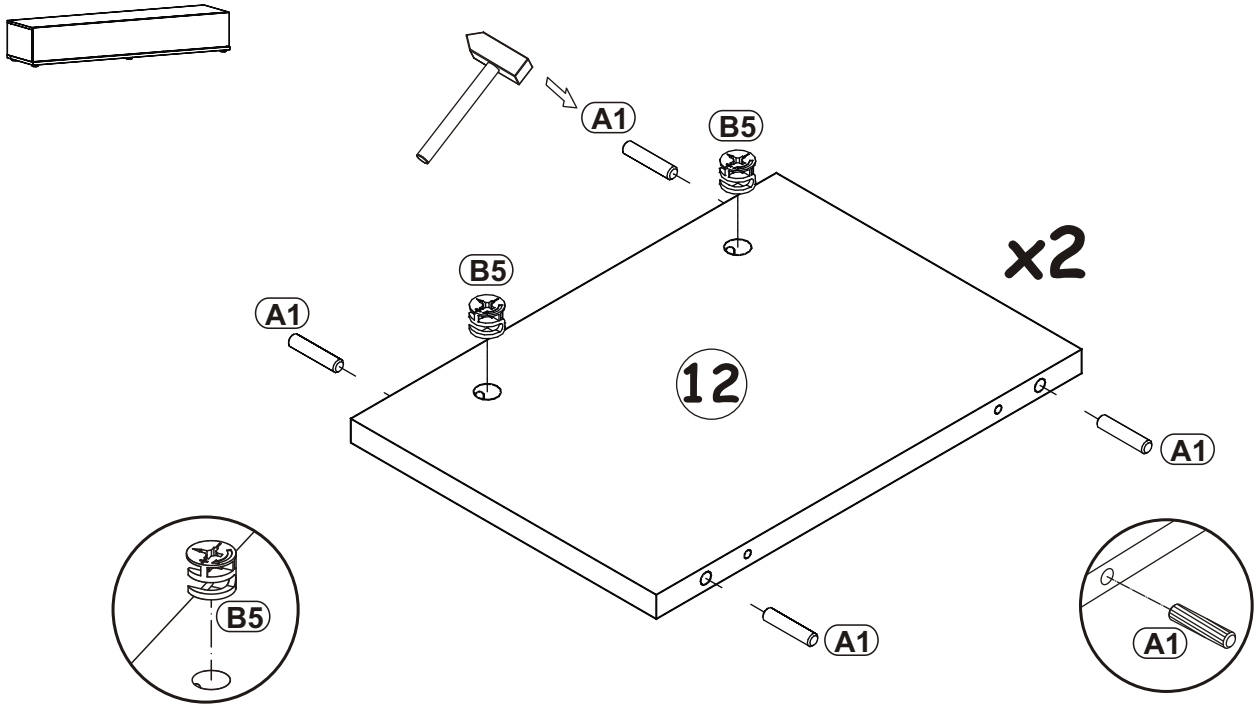

7

B4	
x8	

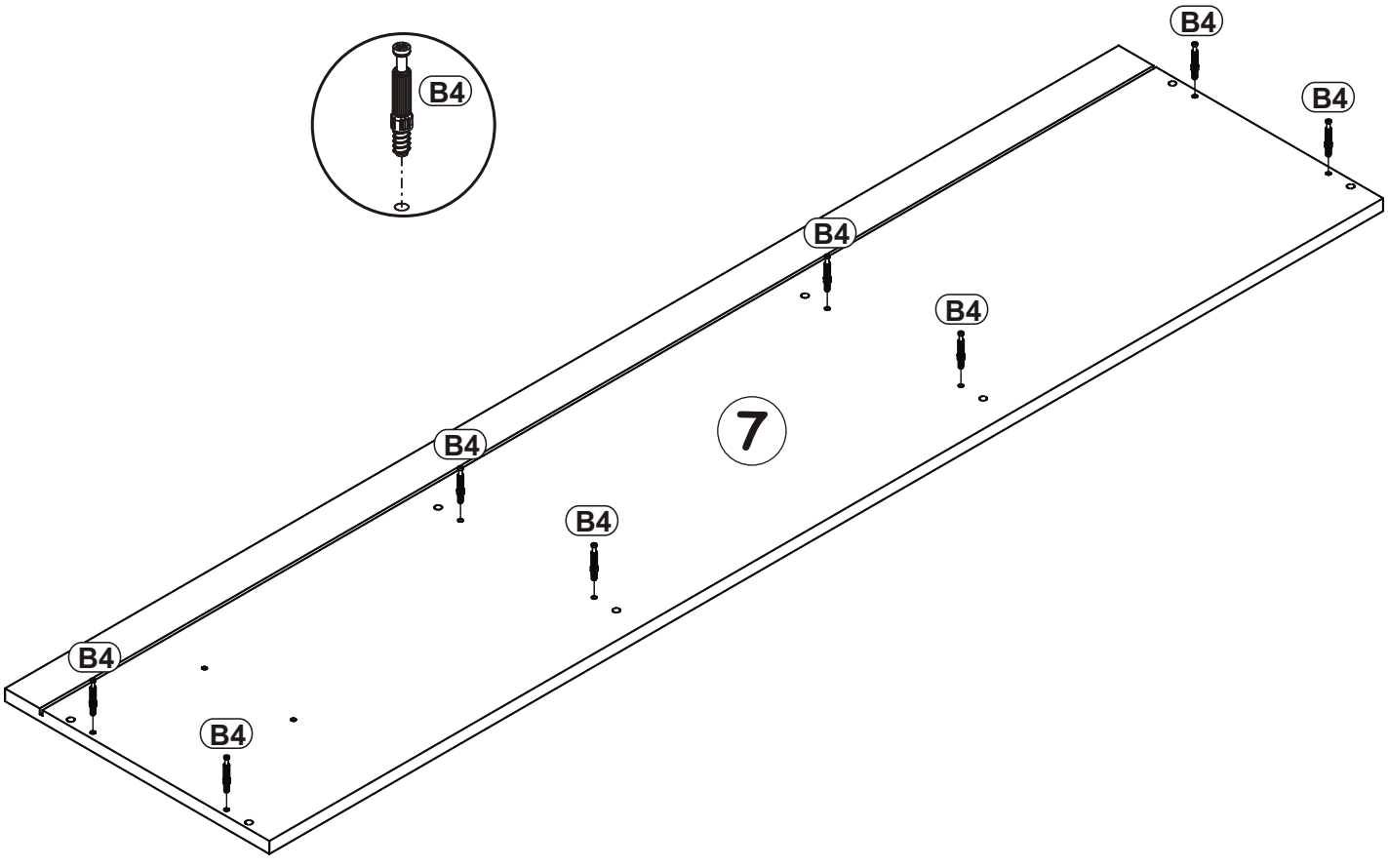

8

I11	UP15	E4
x6	x6	x3
Ø50, h=25	UPØ4x25	H=2

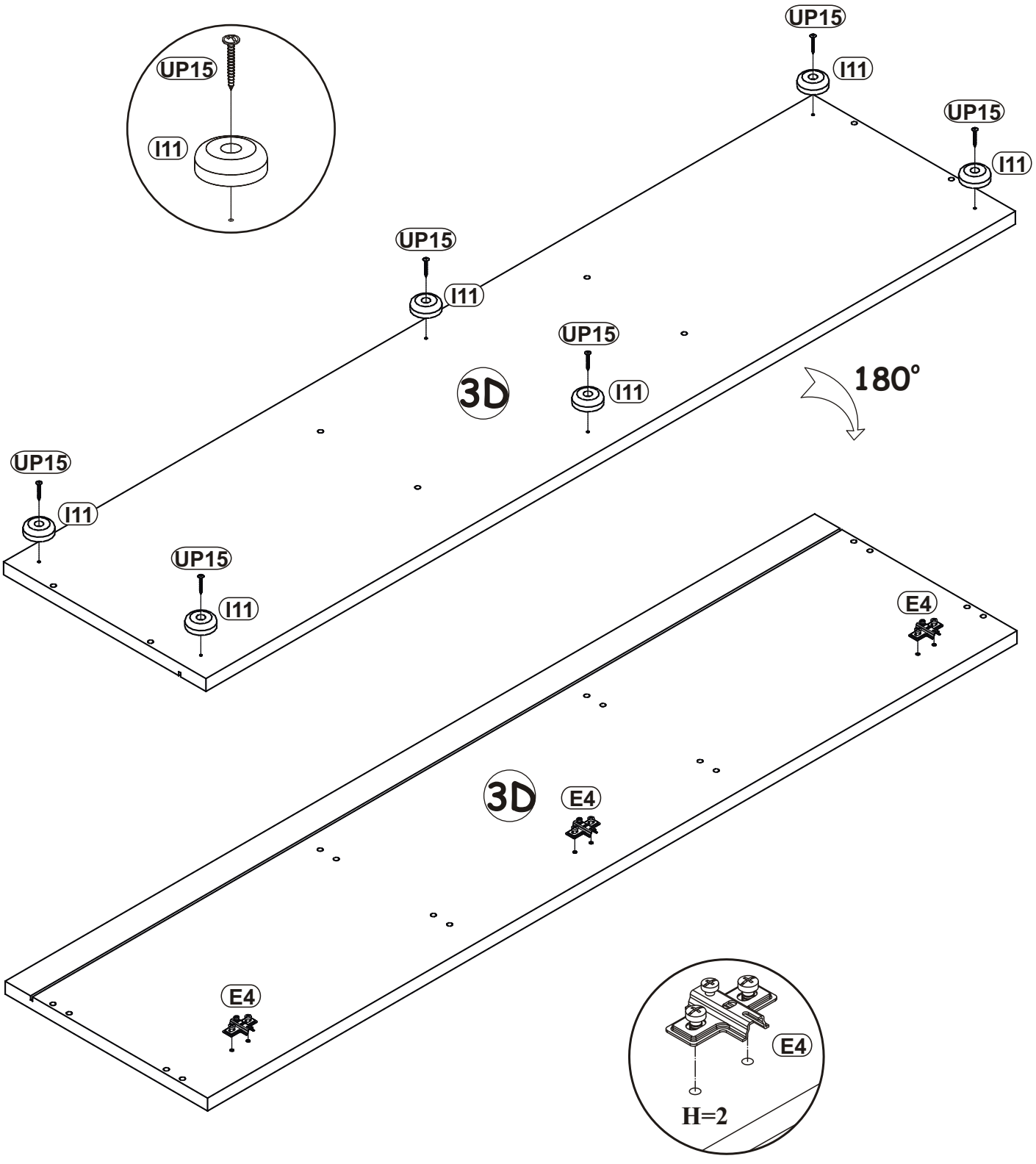

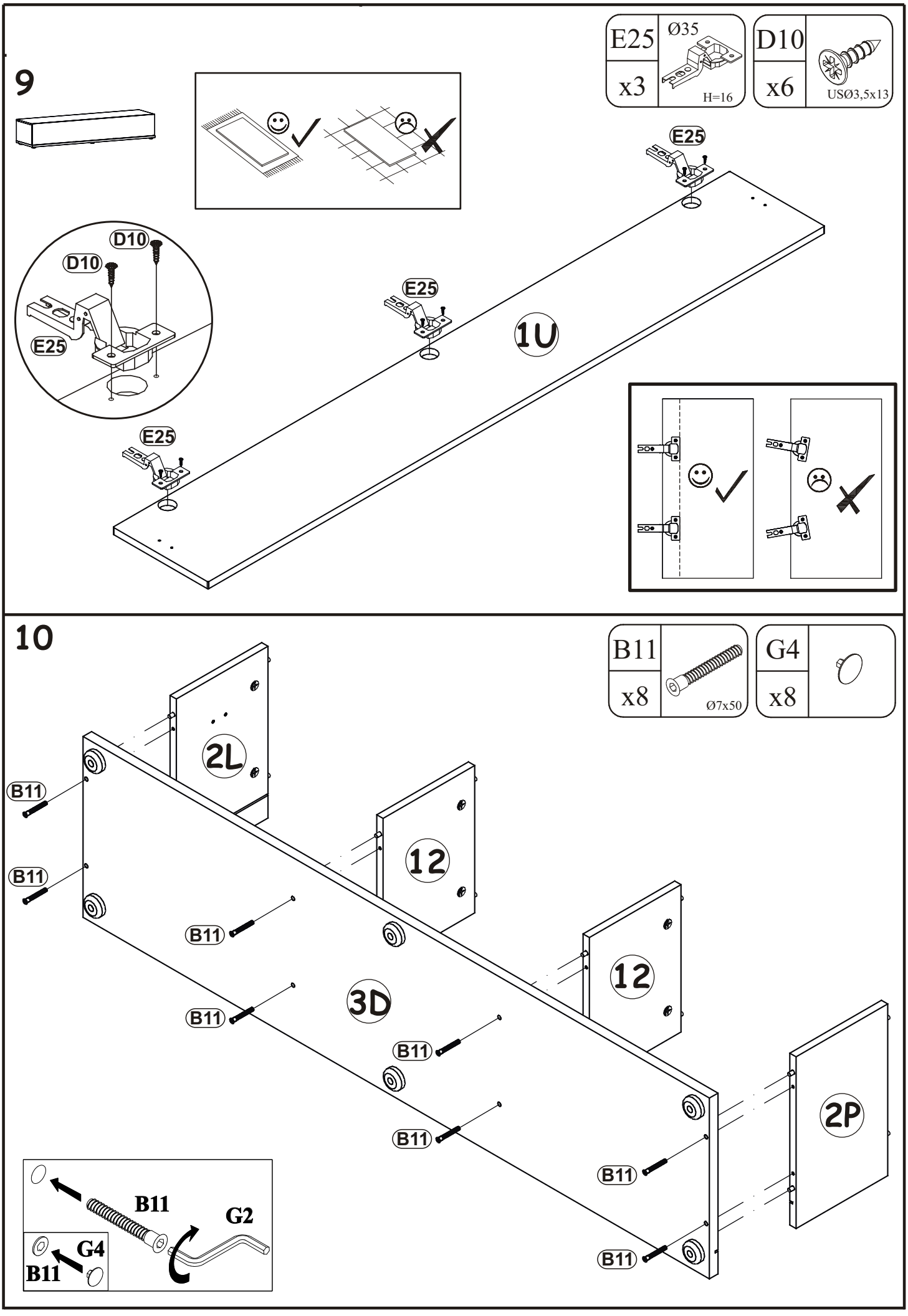
9
E25
x3
Ø35
H=16
D10
x6
USØ3,5x13
E25
D10
D10
E25
E25
1U
E25
10
B11
x8
Ø7x50
G4
x8
2L
12
12
3D
2P
B11
B11
B11
B11
B11
B11
B11
B11
B11
G2
G4
B11

11

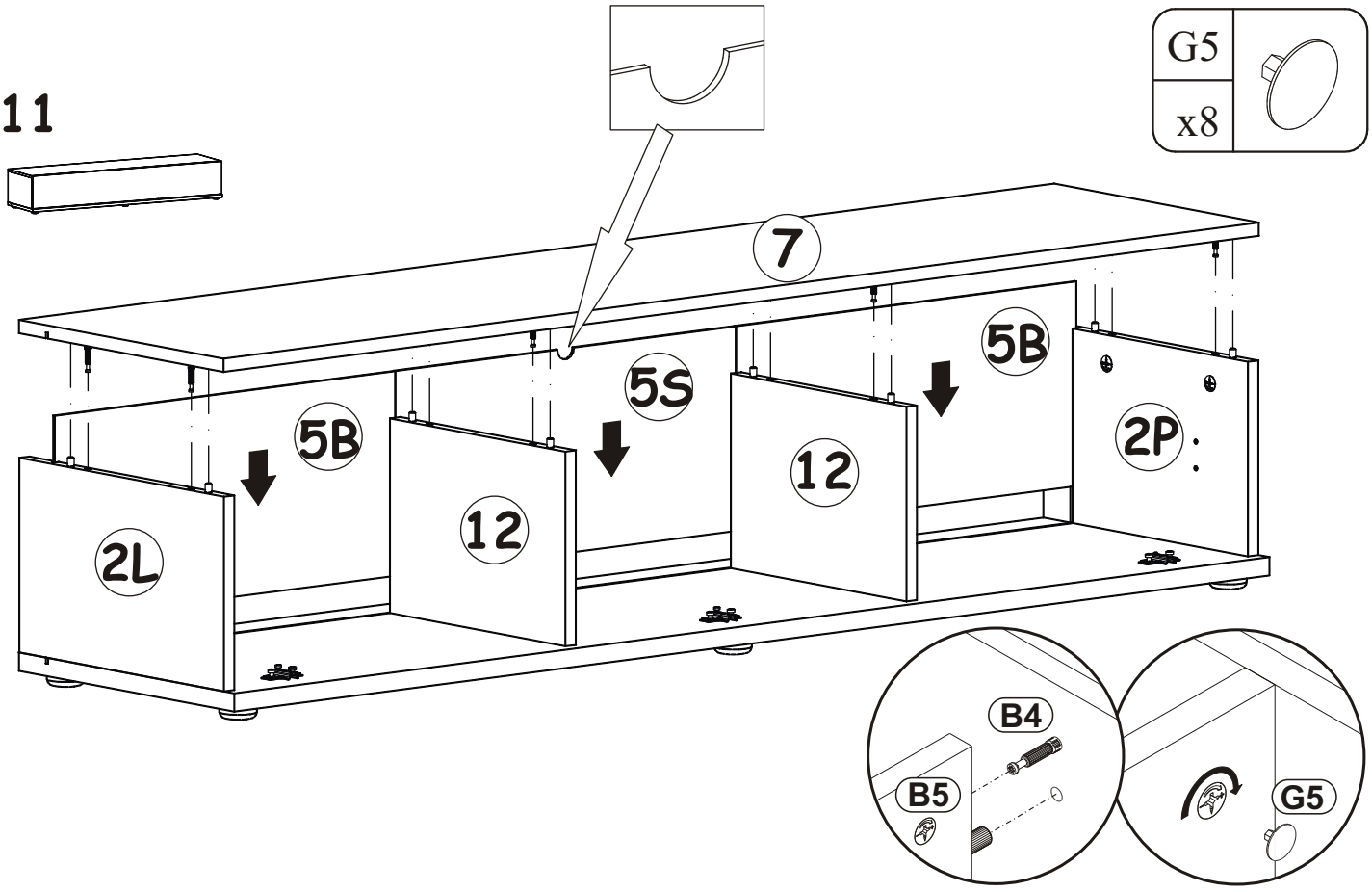
G5
x8
7
5B
5S
5B
2P
12
12
2L
B4
B5
G5

12

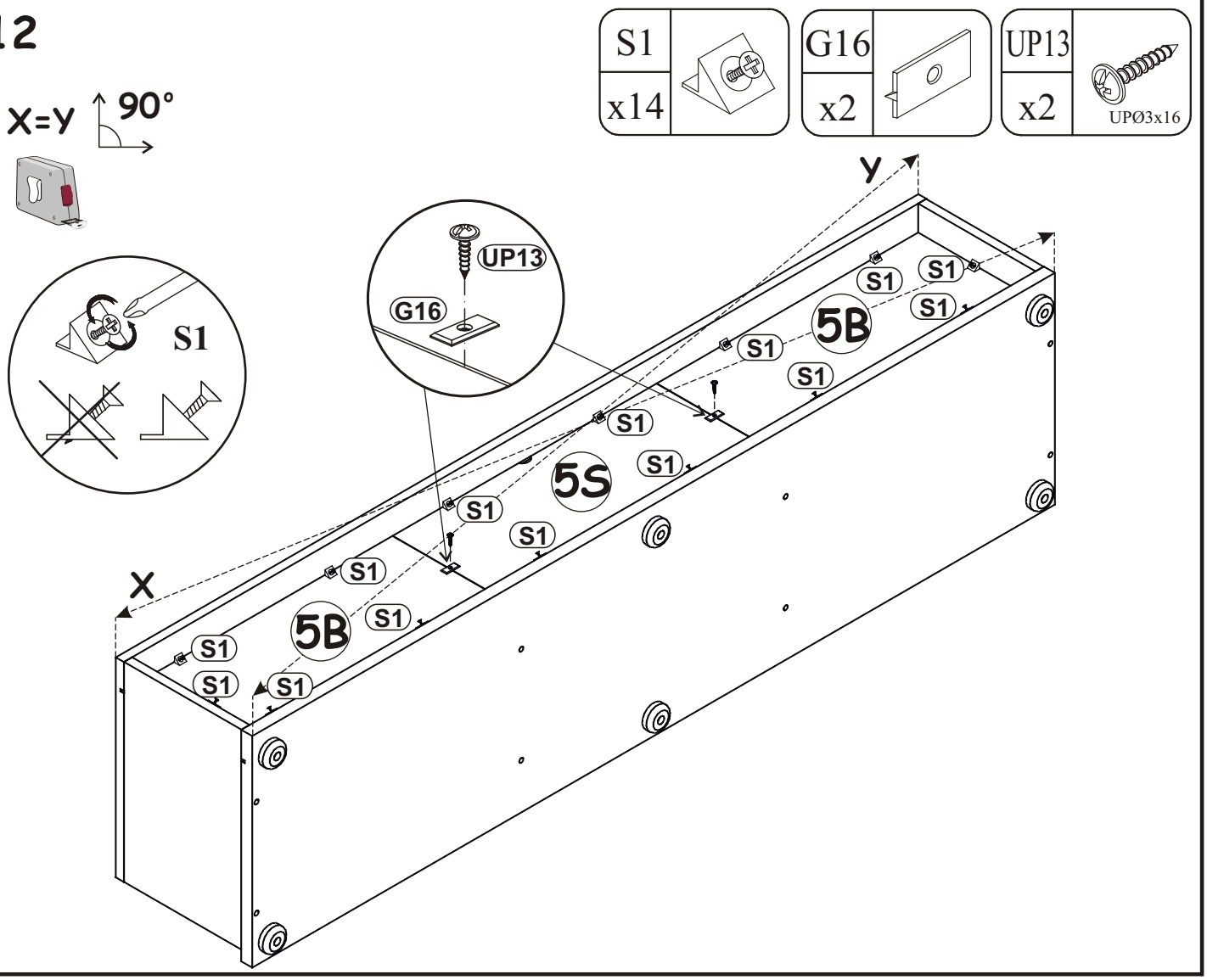
S1
x14
G16
x2
UP13
x2
UPØ3x16
X=Y
90°
S1
UP13
G16
Y
X
5B
5S
5B
S1

13

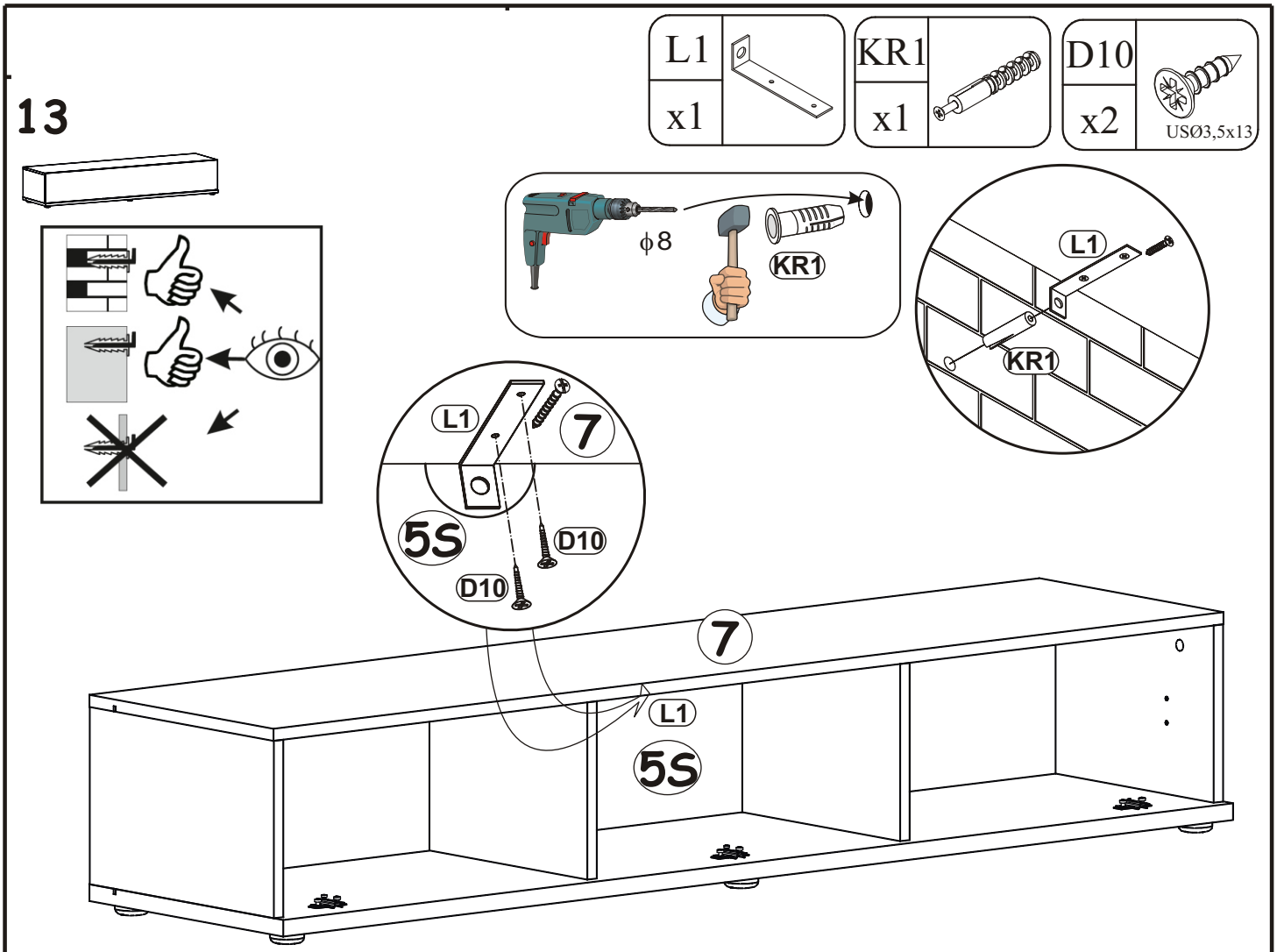
L1
x1
KR1
x1
D10
x2
USØ3,5x13
ϕ8
KR1
L1
KR1
L1
7
5S
D10
D10
7
L1
5S

14

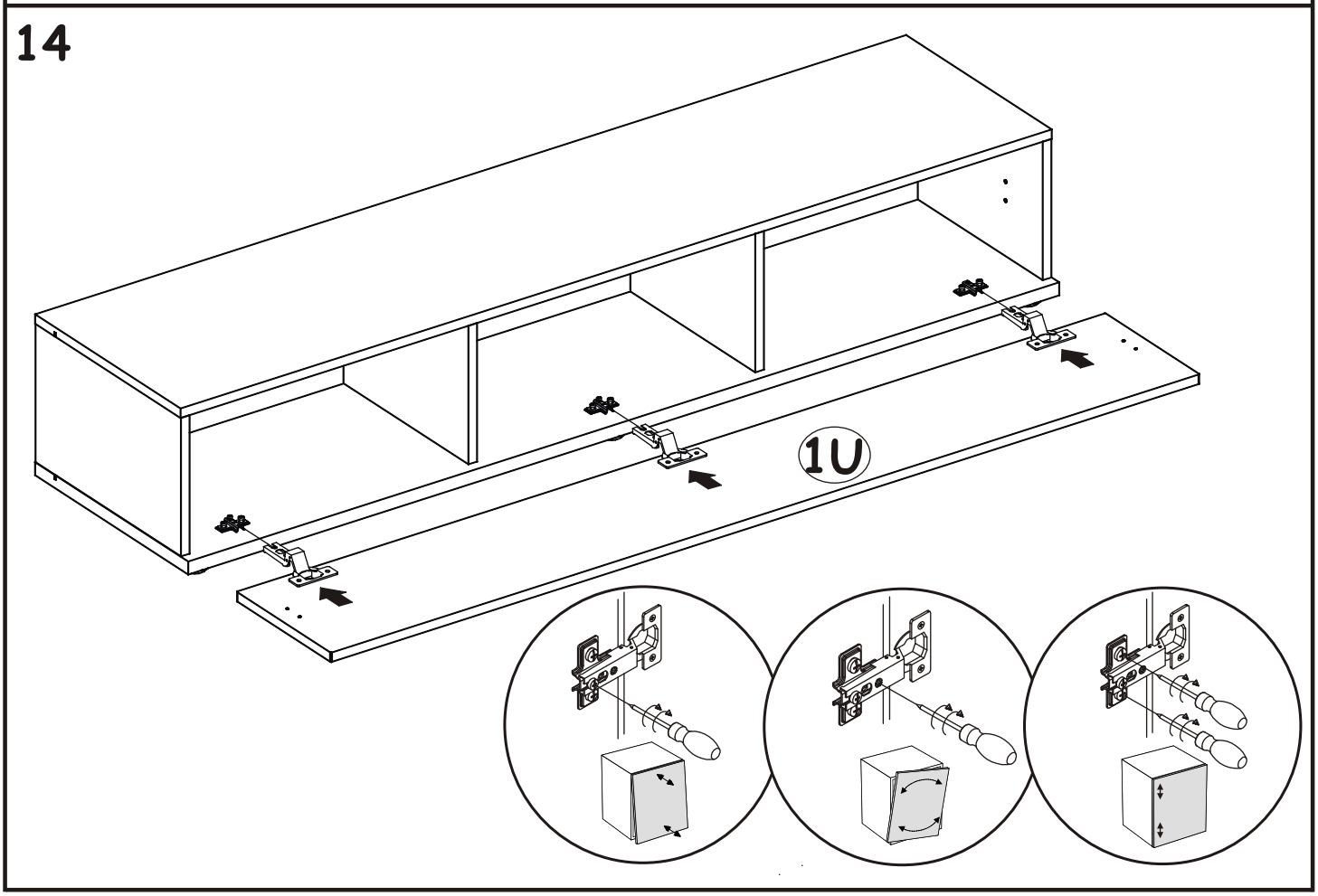
1U

15

G21	D7	D10	OD2
x2	x6	x8	x1
	USØ3x16	USØ3,5x13	

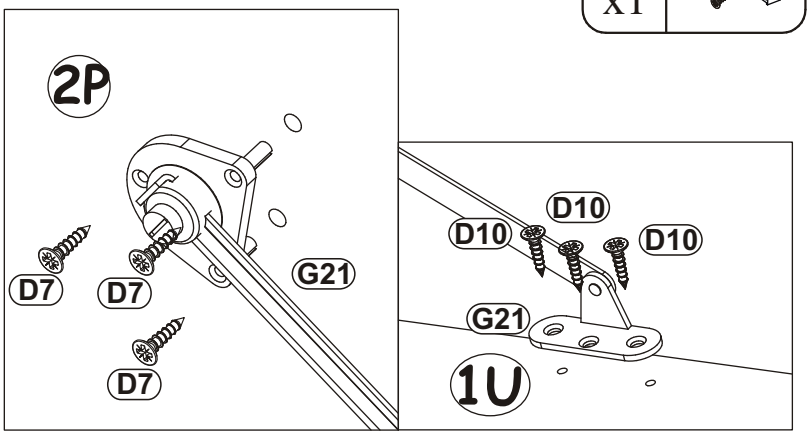

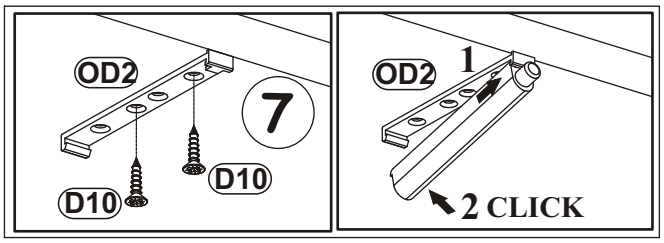

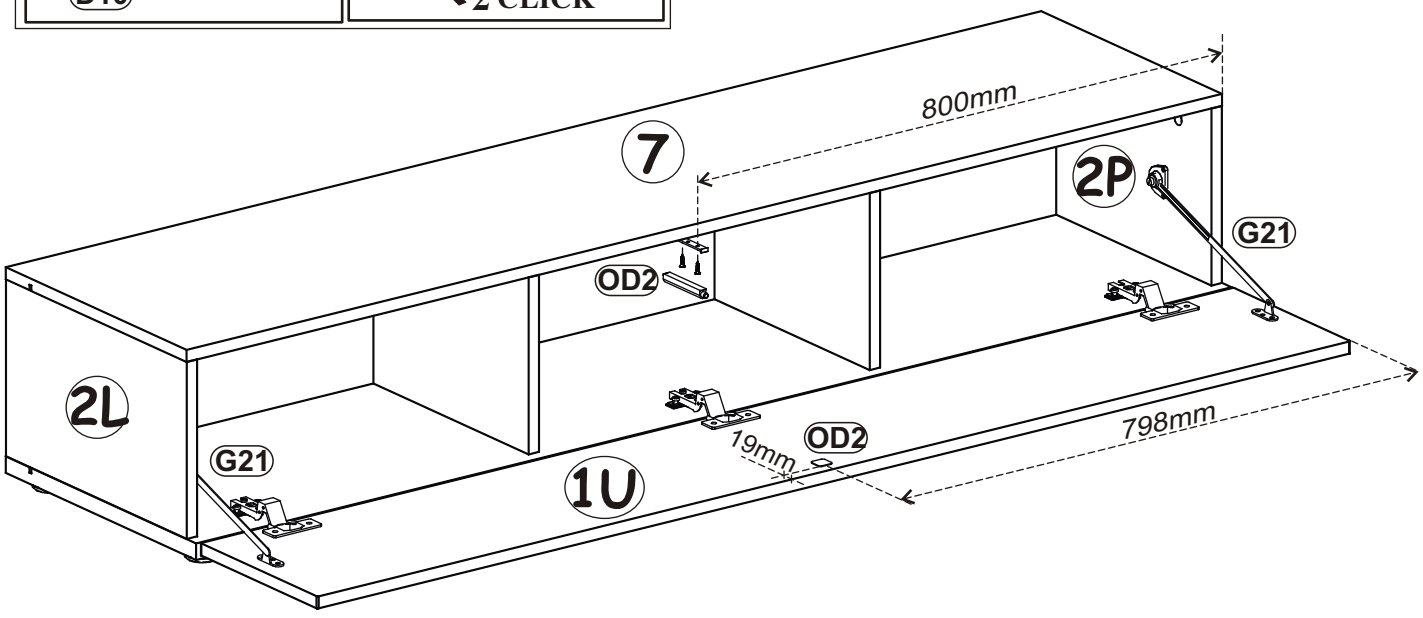

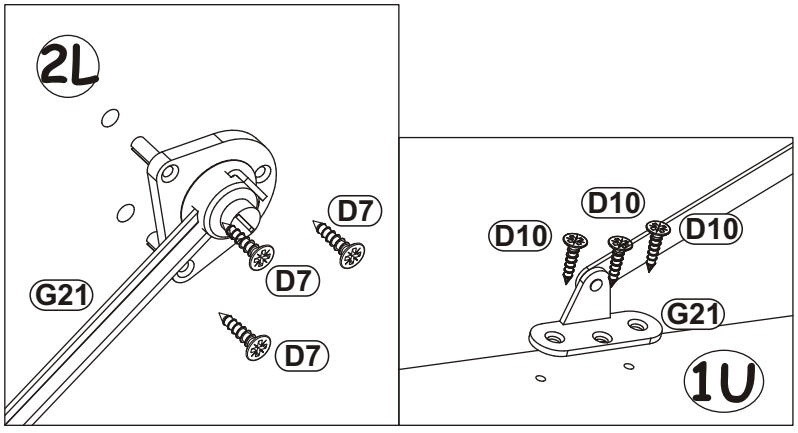

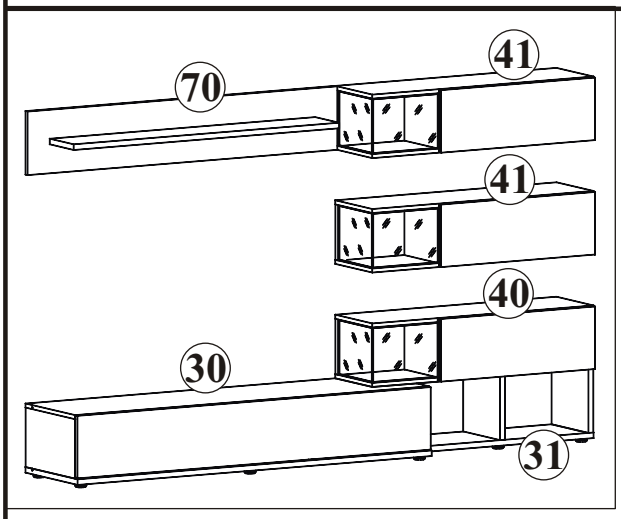

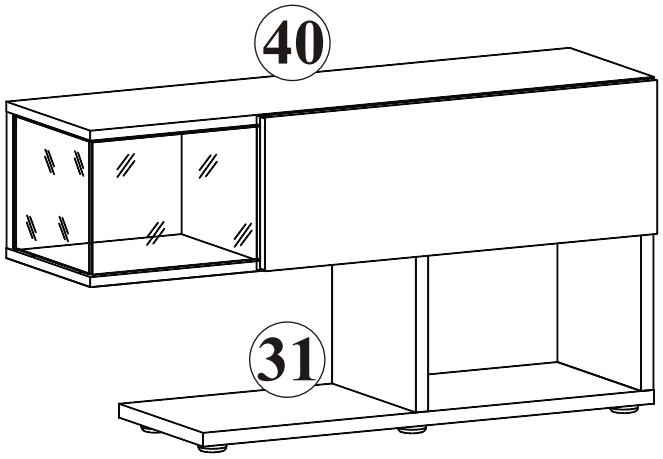

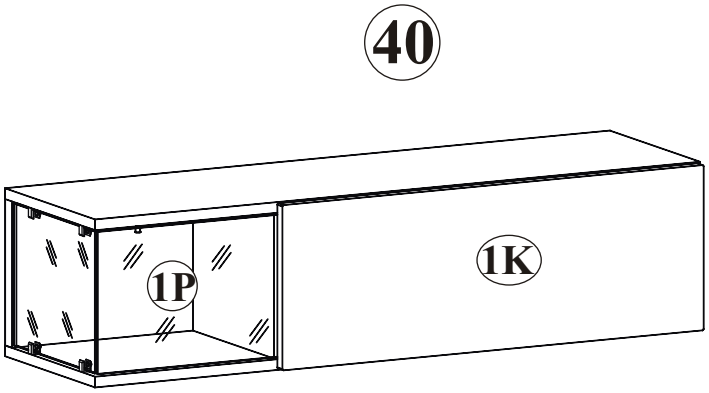

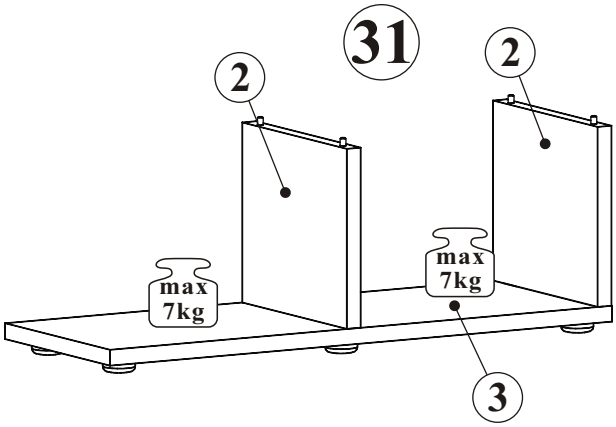

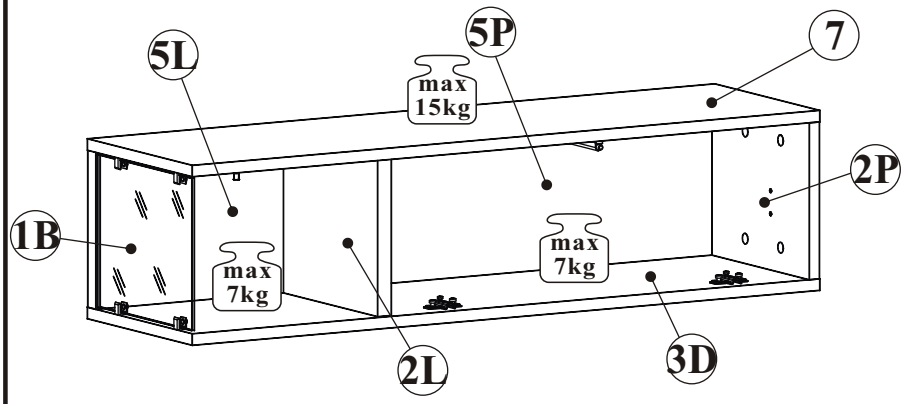

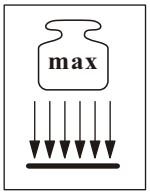

NO	Dim.			Col.-No	Qty
1K	696	246	16	2 / 3.	1
1P	212	318	4	2 / 3.	1
1B	212	255	4	2 / 3.	1
2	250	283	22	4 / 3.	2
2L	277	218	22	5 / 3.	1
2P	218	284	16	2 / 3.	1
3	800	284	22	2 / 3.	1
3D	1000	284	16	2 / 3.	1
5L	299	218	22	2 / 3.	1
5P	230	674	3	2 / 3.	1
7	1000	284	16	2 / 3.	1

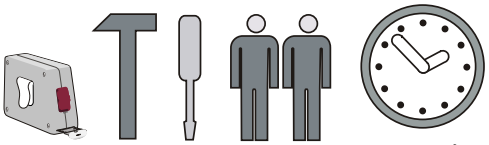

90 min

A1 x20 ø8x36	B4 x12	B5 x4 Ø15x12	B16 x8 Ø15x16	G5 x12	B11 x4 Ø7x50
E21 x2 Ø35 H=0	E2 x2 H=0	D10 x11 USØ3,5x13	G21 x1	D7 x3 USØ3x16	G4 x4
I11 x6 Ø50, h=25	UP15 x6 UPØ4x25	G20 x1	G32 x4	P2 x3	UP13 x3 UPØ3x16
S1 x6	OD2 x1	KR1 x1	L1 x1	G2 x1	UP6 x2 UPØ4x30

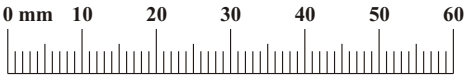

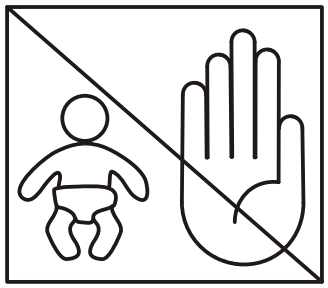

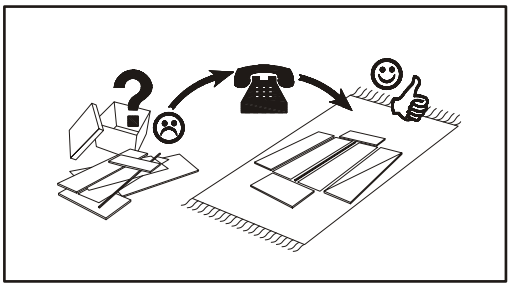

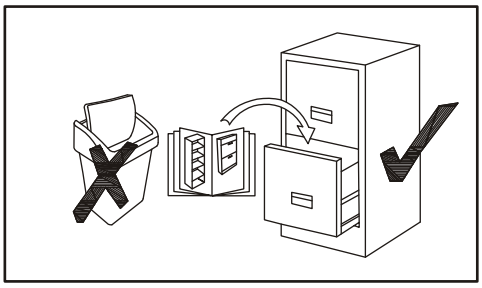

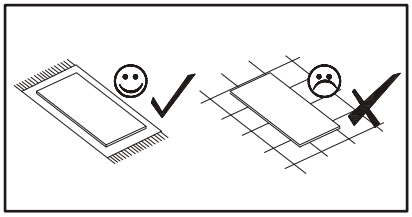

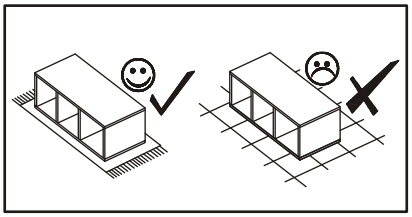

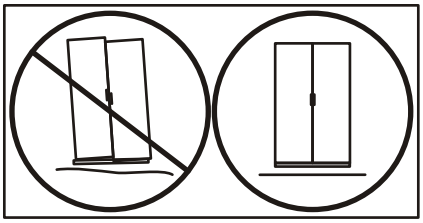

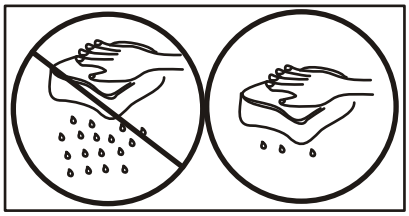

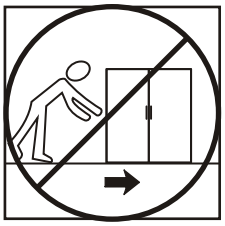

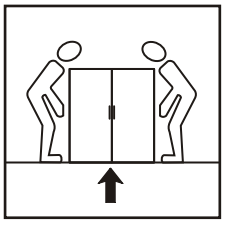

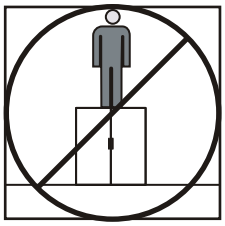

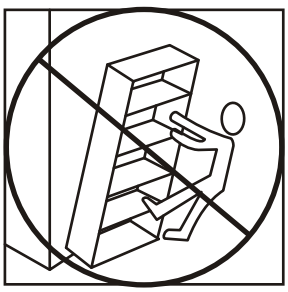

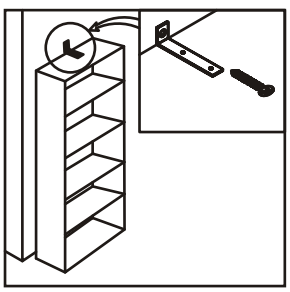

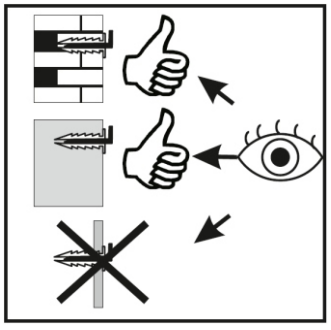

1 - 3

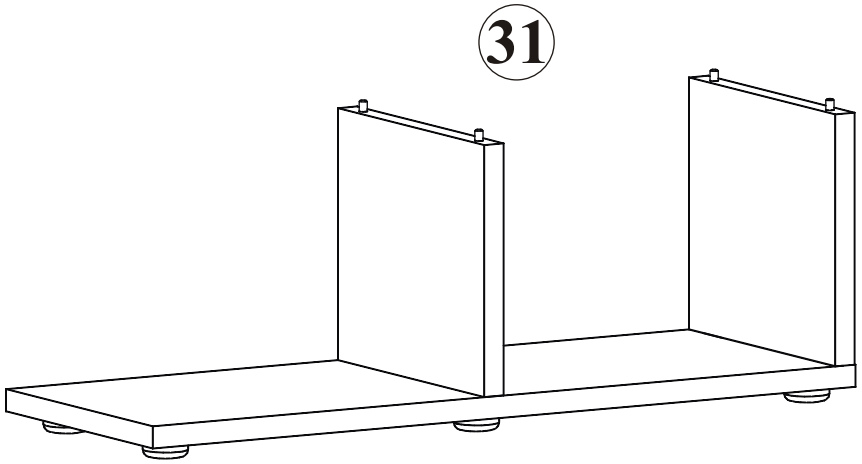

4 - 15

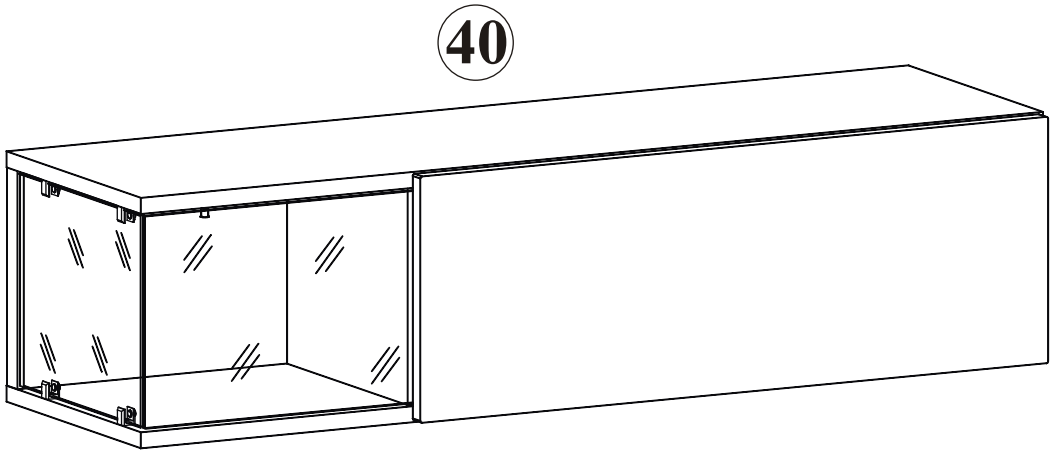

16 - 17

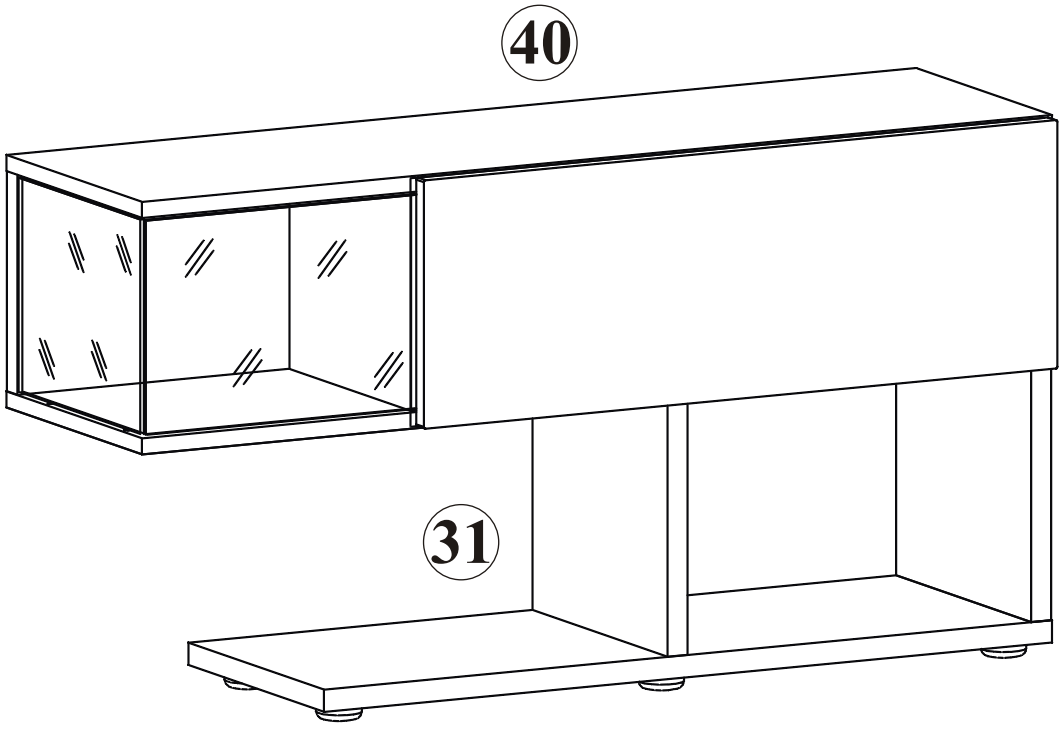

1

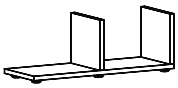

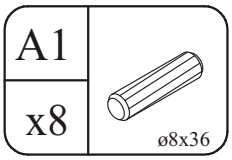
A1
x8
ø8x36

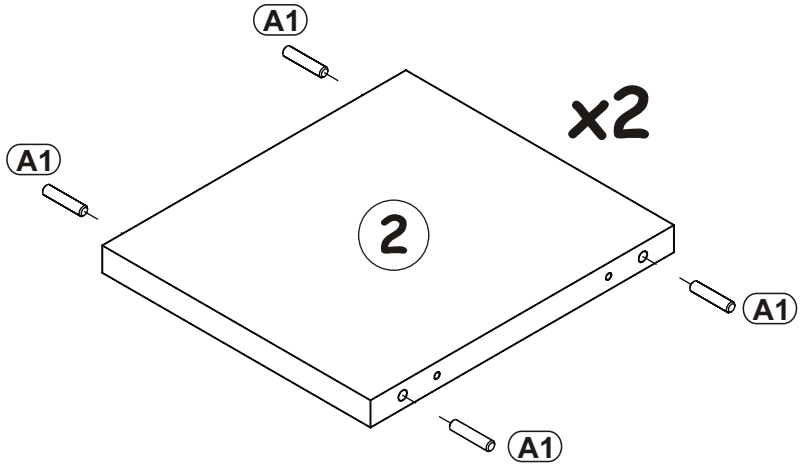
A1
x2
2
A1
A1
A1

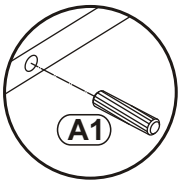
A1

2

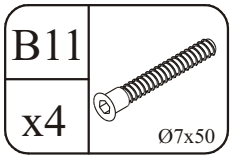
B11
x4
Ø7x50

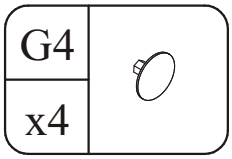
G4
x4

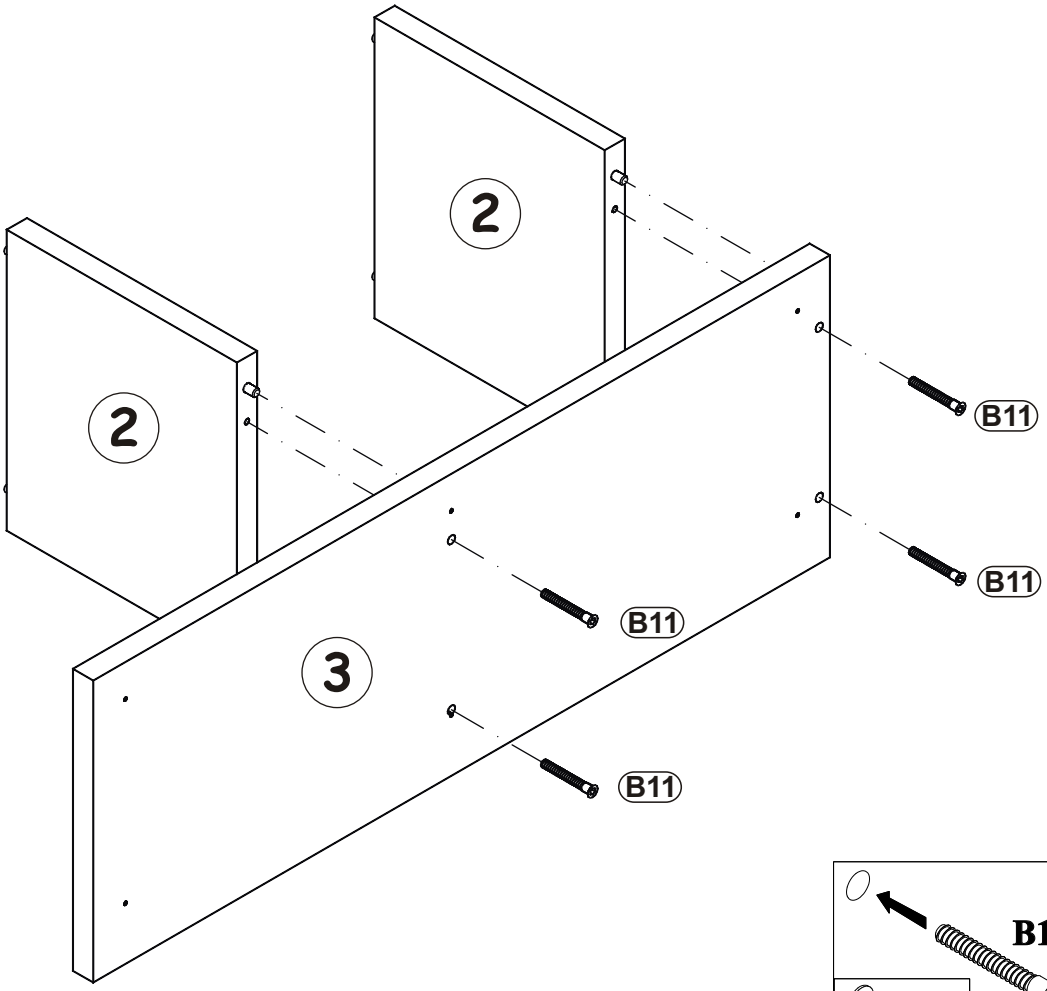
2
2
3
B11
B11
B11
B11

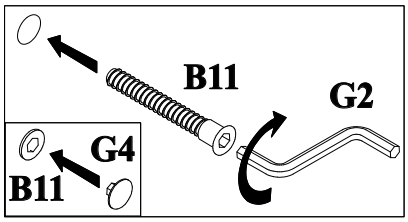
B11
G2
G4
B11

3

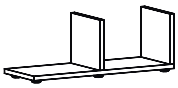

I11	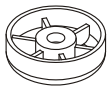
x6	Ø50, h=25

UP15	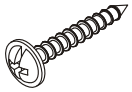
x6	UPØ4x25

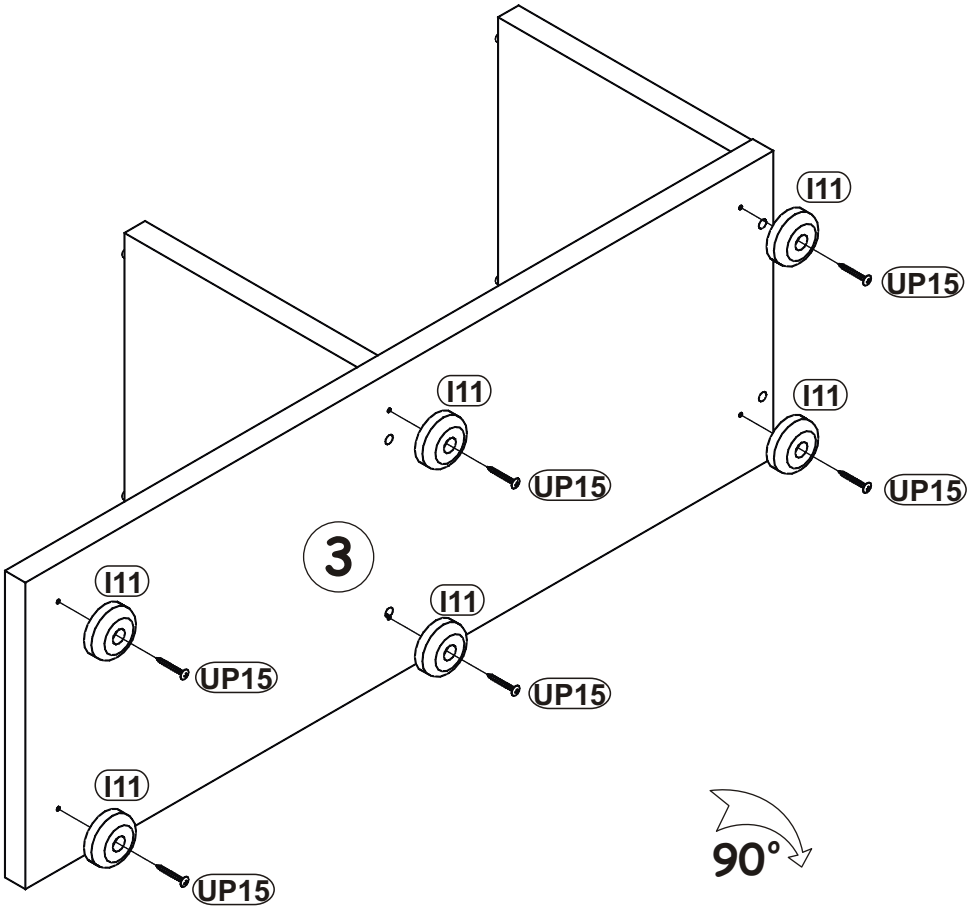

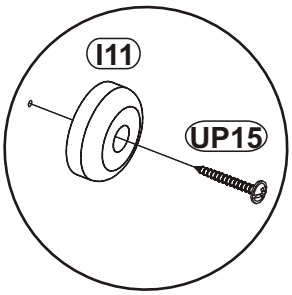

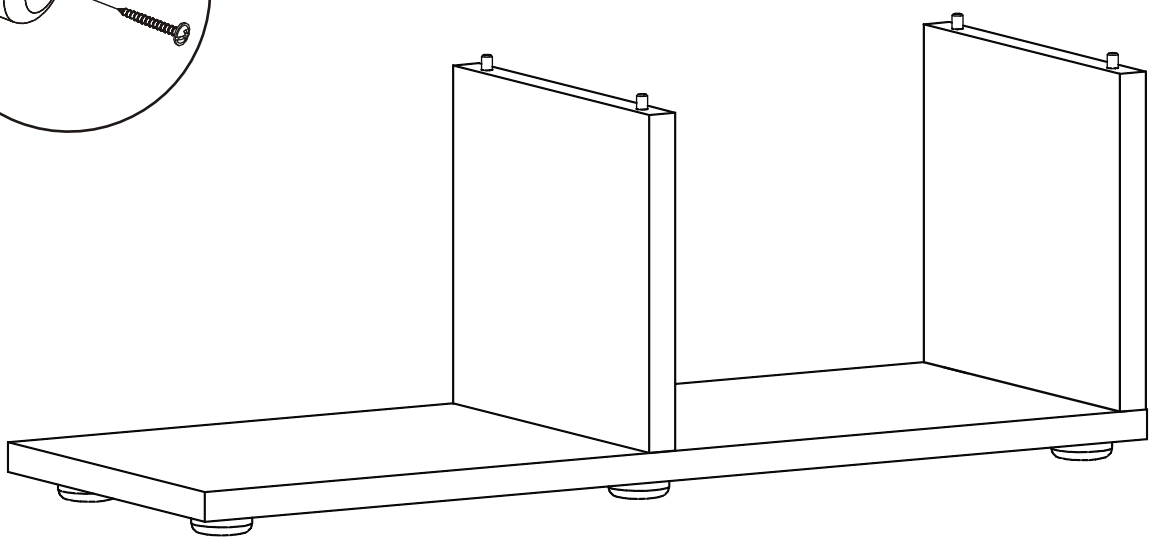

4

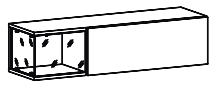

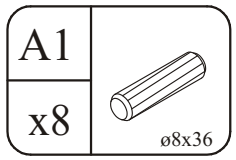
A1
x8
ø8x36
B16
x8
Ø15x16

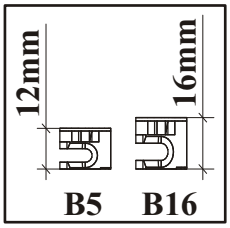
12mm
16mm
B5
B16

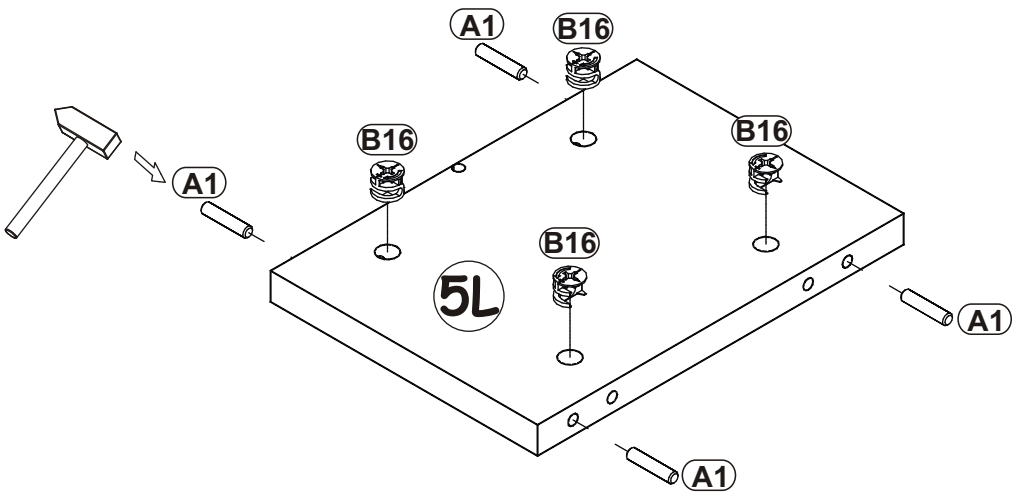
A1
B16
B16
B16
5L
A1
A1

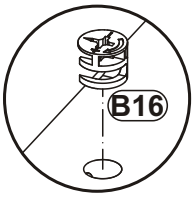
B16

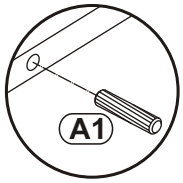
A1

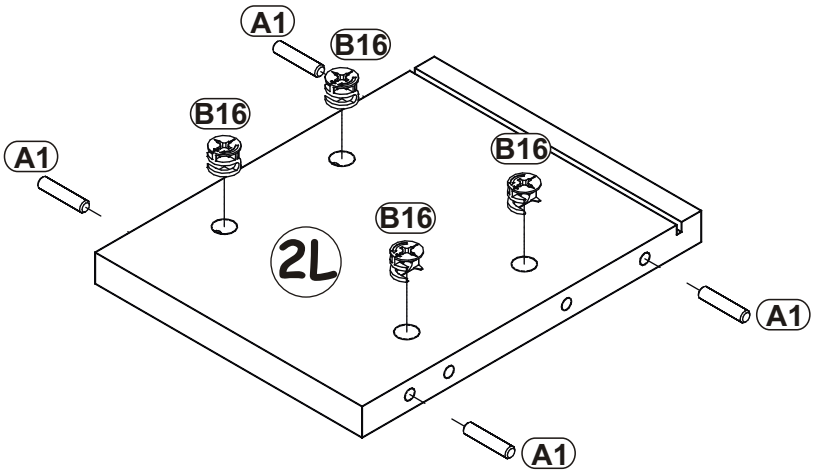
A1
B16
B16
B16
A1
B16
2L
A1
A1

5

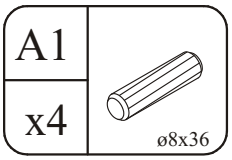
A1
x4
ø8x36
B5
x4
Ø15x12

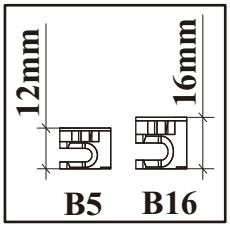
12mm
16mm
B5
B16

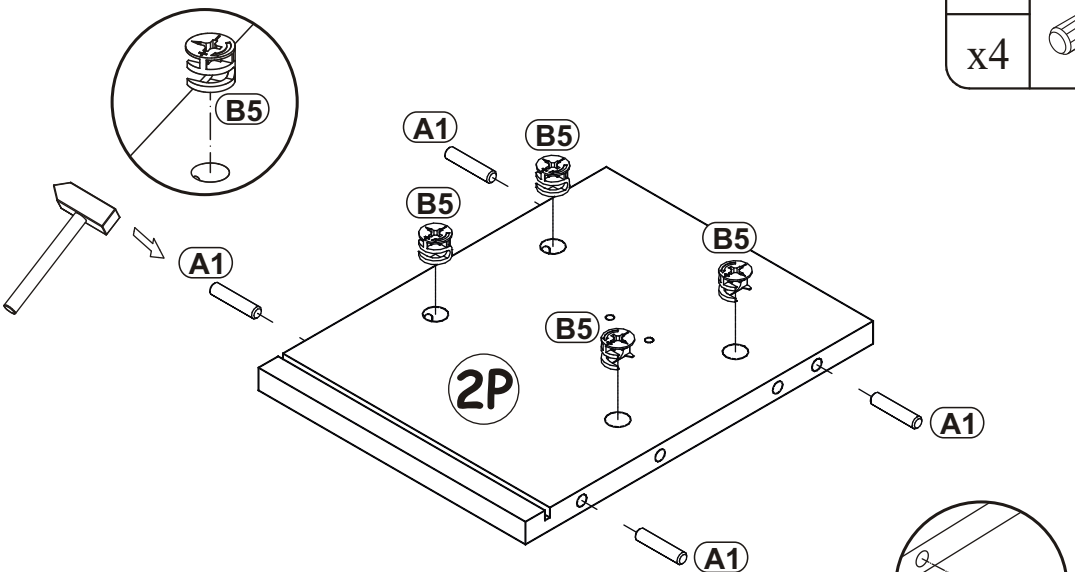
B5
A1
B5
B5
B5
B5
2P
A1
A1

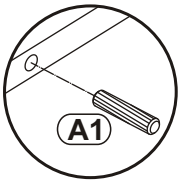
A1

6

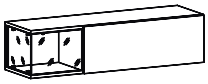

B4	G32	G20
x6	x2	x1

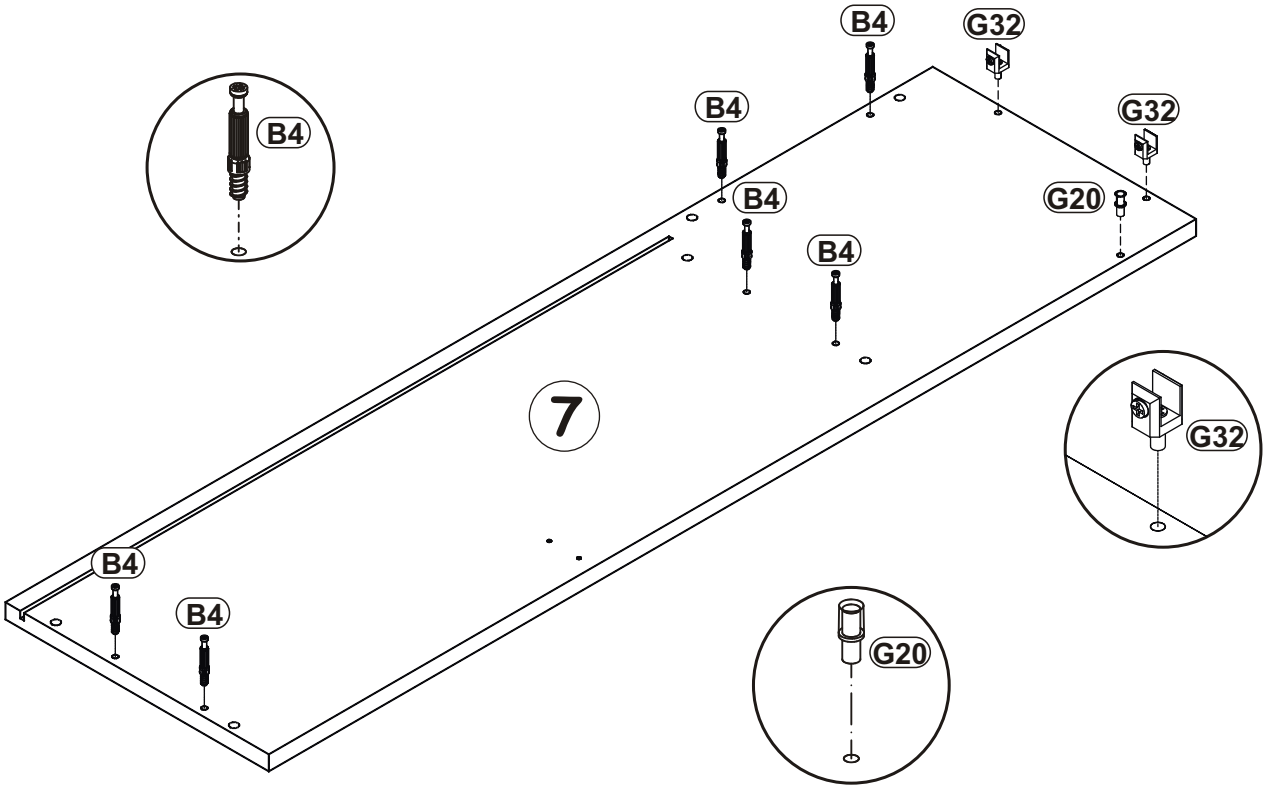

7

B4	G32	E2
x6	x2	x2
		H=0

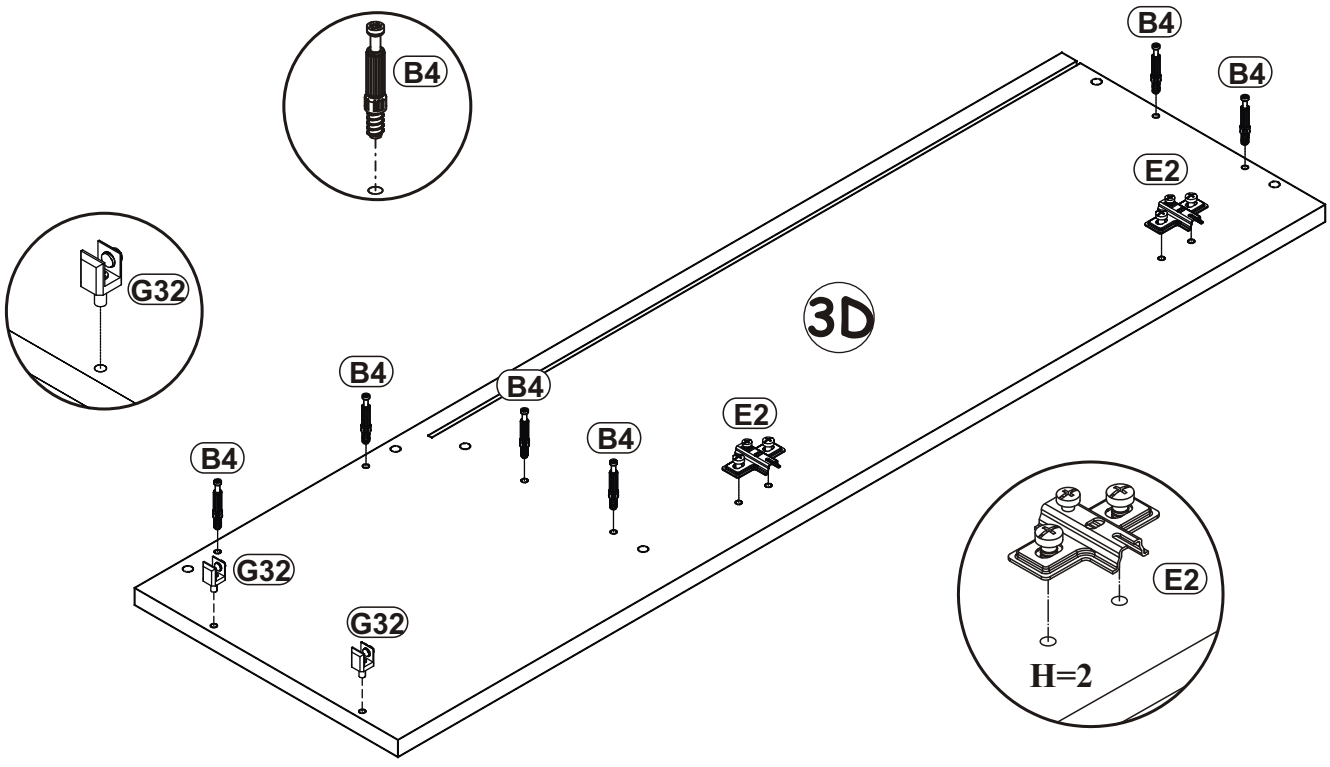

8

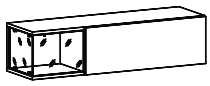

E21	Ø35
x2	H=0

D10	USØ3,5x13
x4	

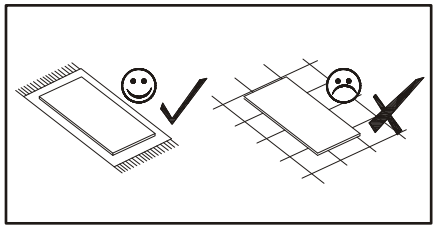

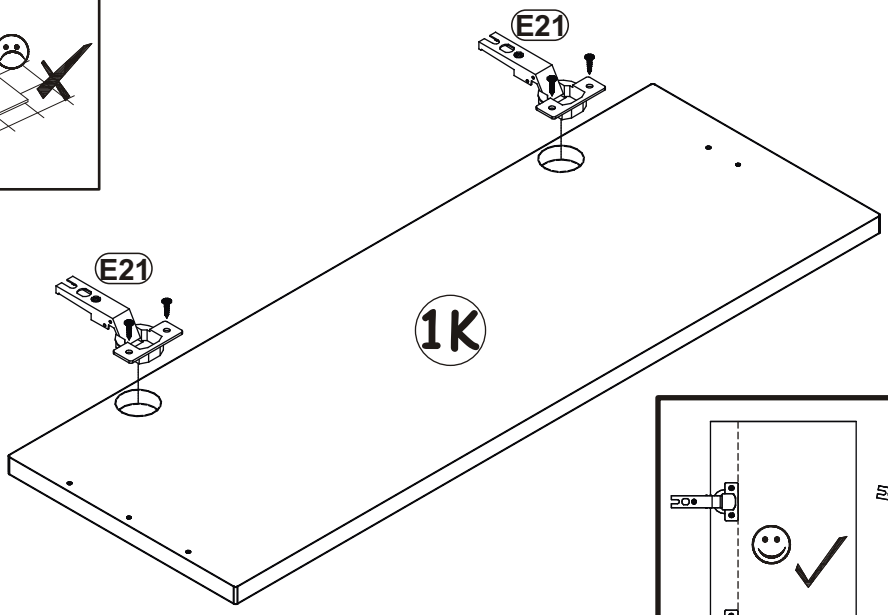

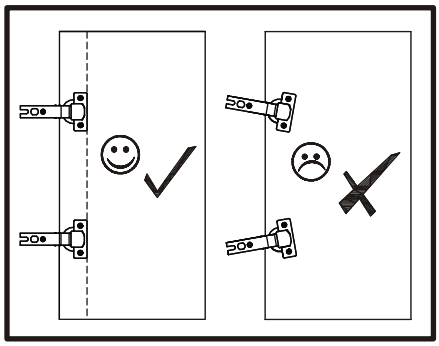

9

G5	
x6	

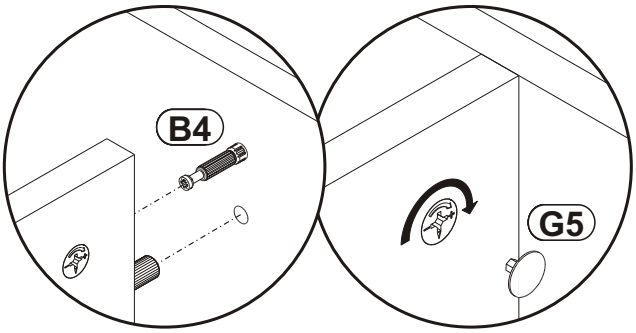

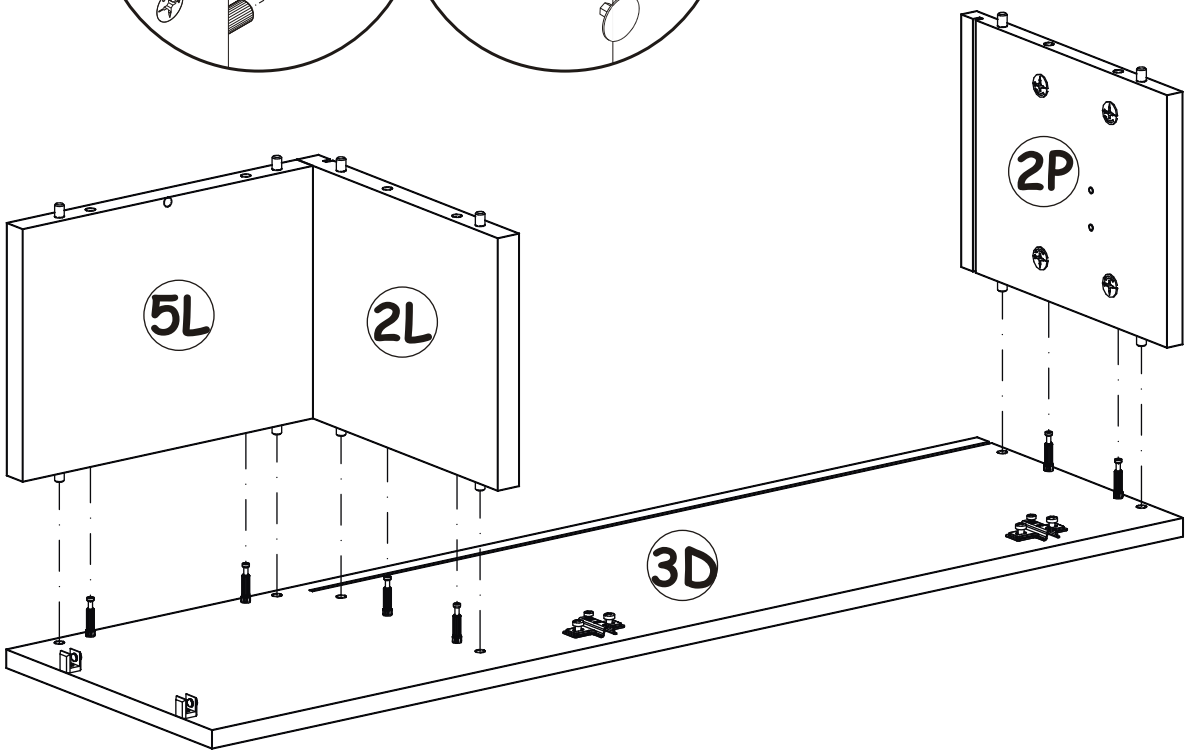

10

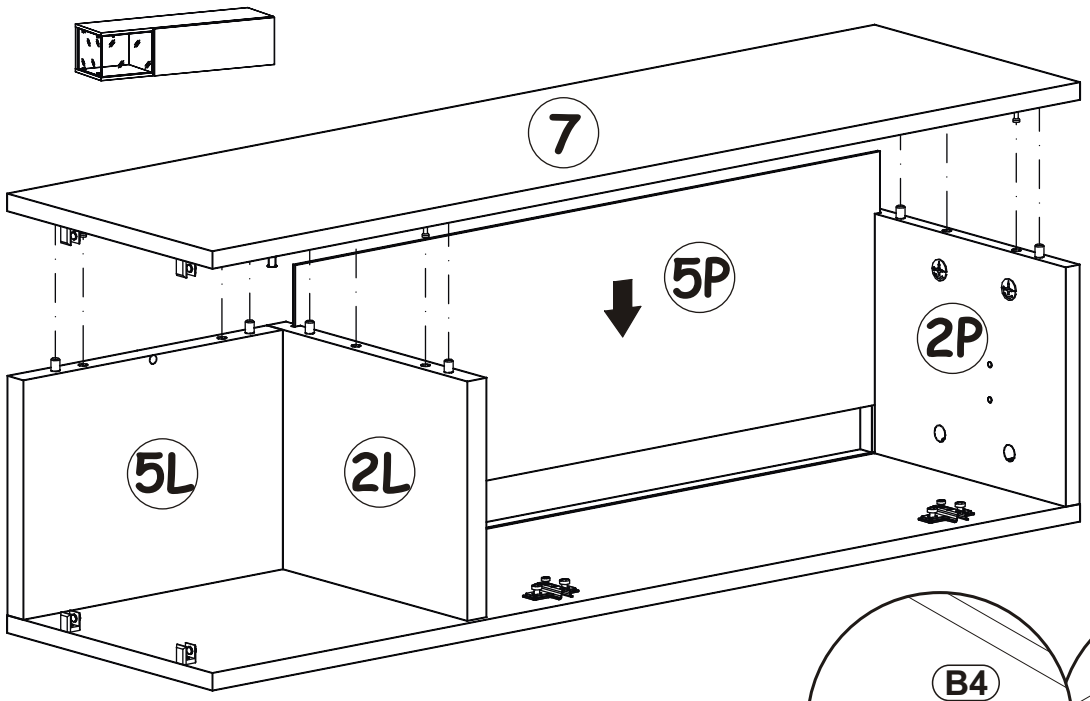

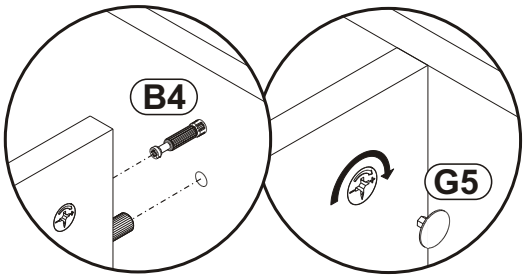

G5 x6

11

X=Y 90°

S1 x6

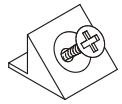

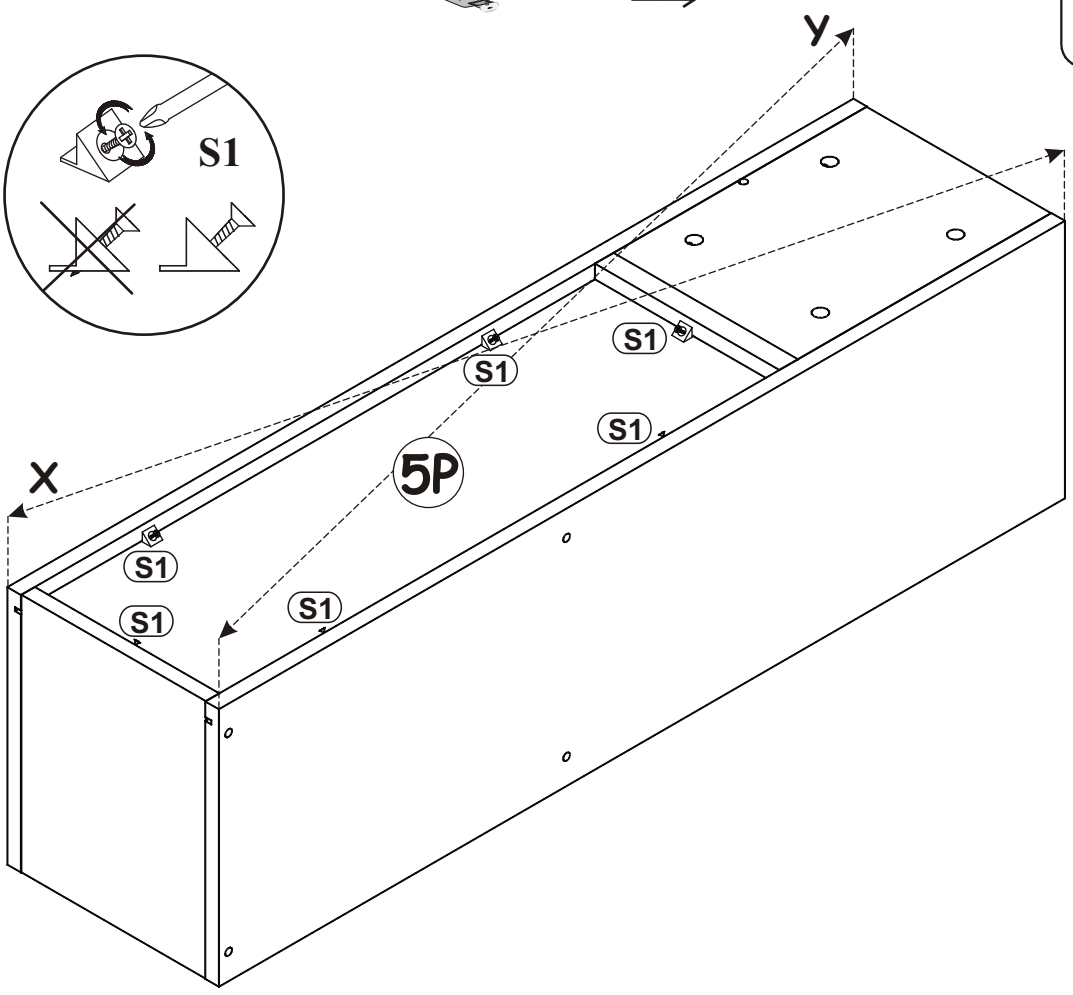

12

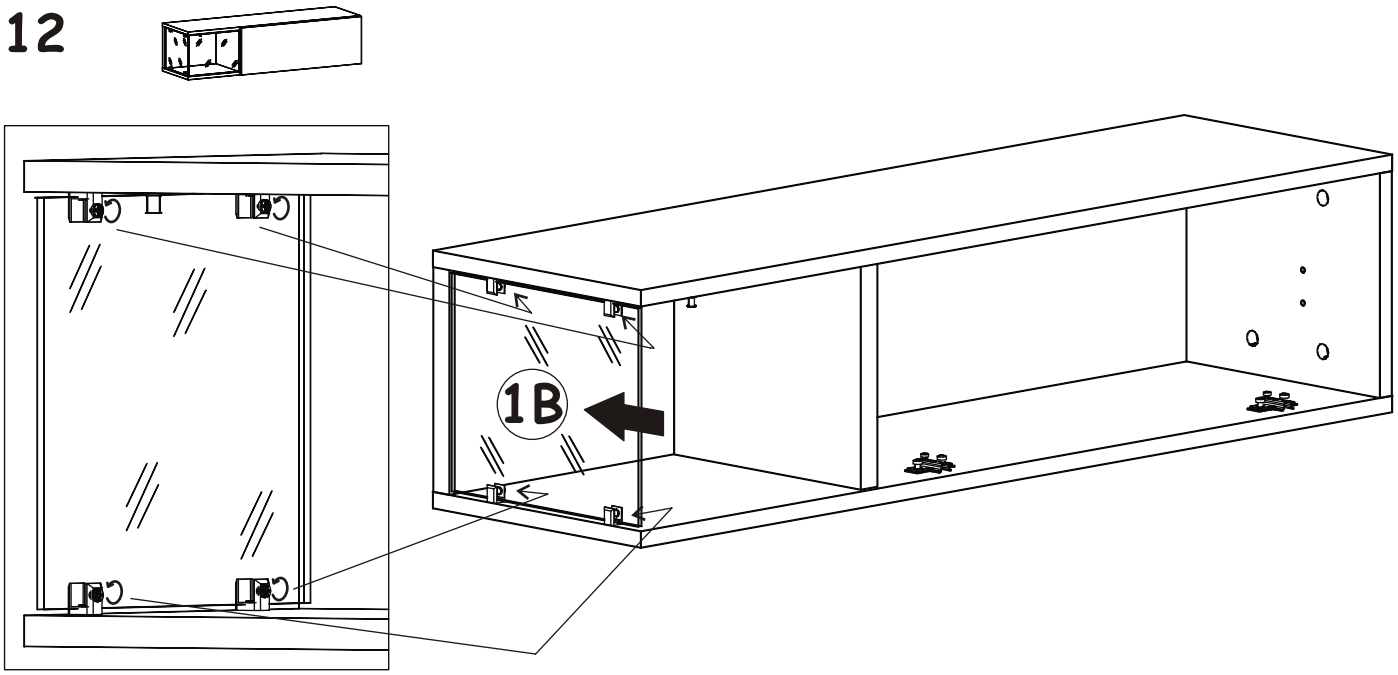

13

OD2	D10
x1	x2

USØ3,5x13

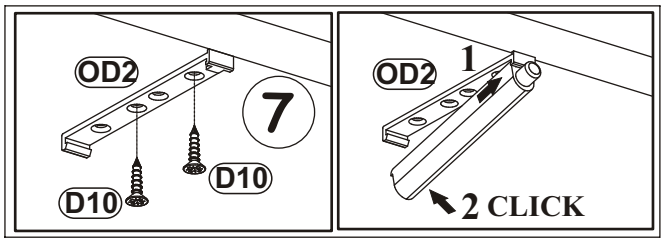

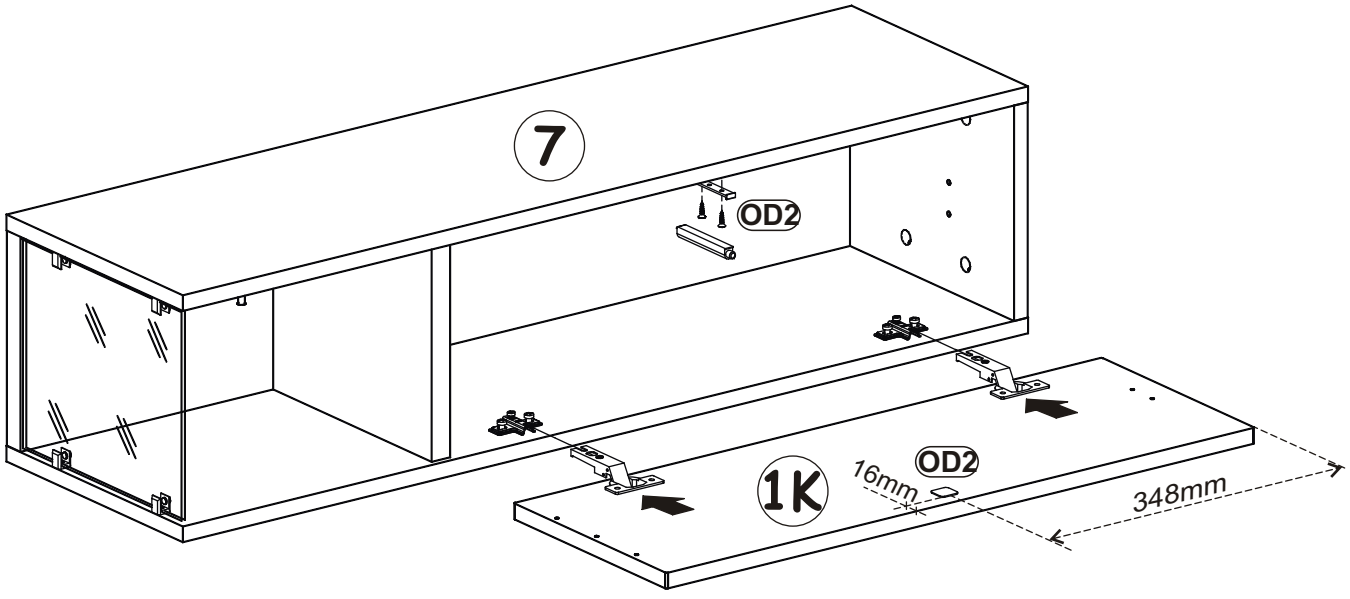

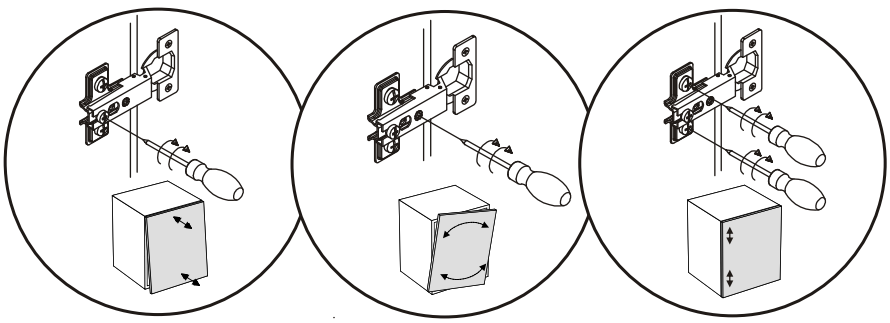

14

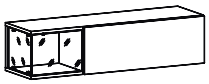

G21	D7	D10
x1	x3	x3

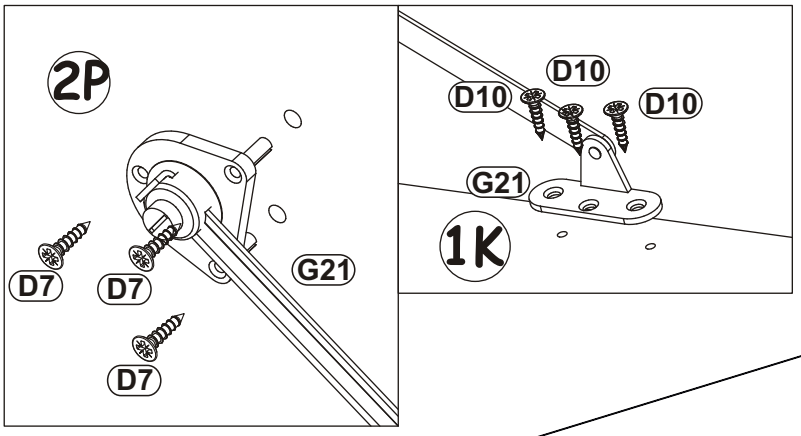

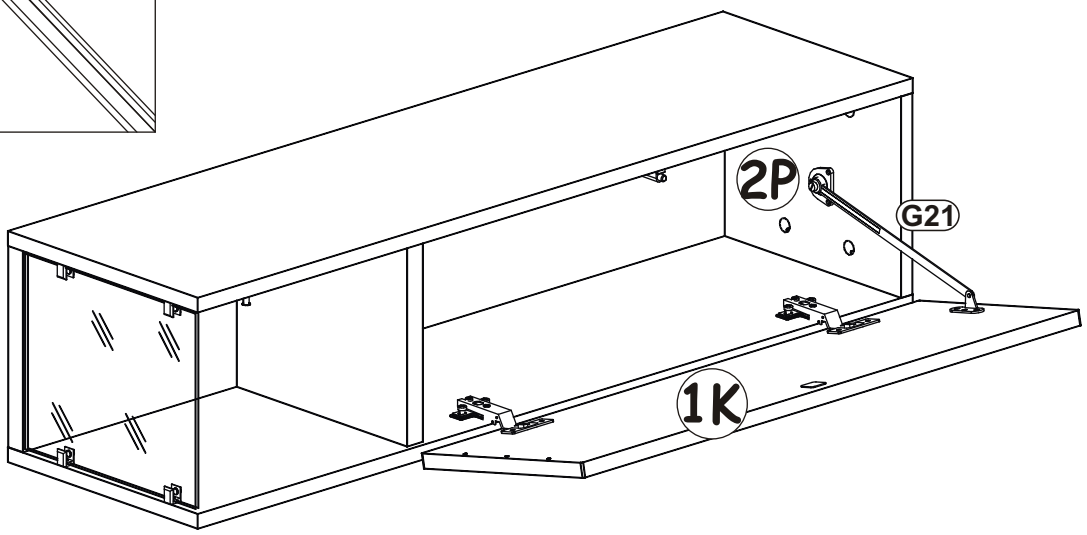

15

P2	UP13
x3	x3

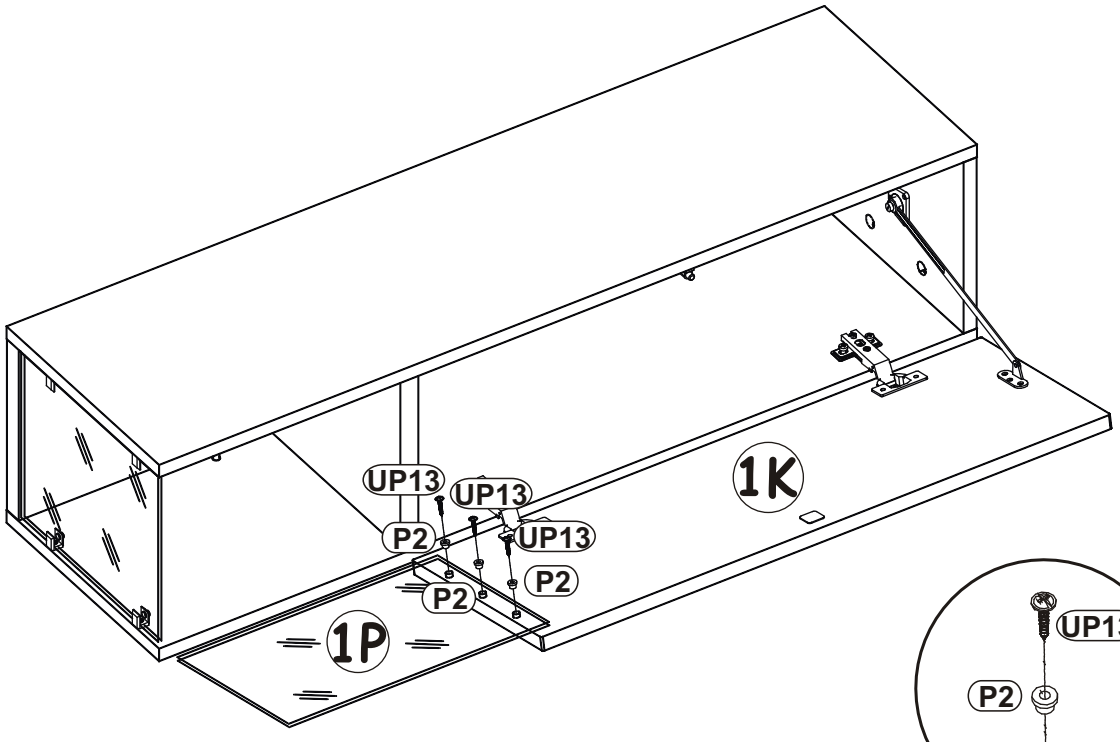

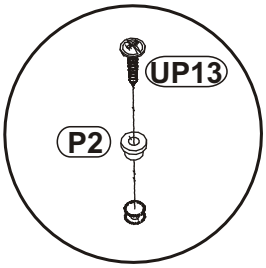

16

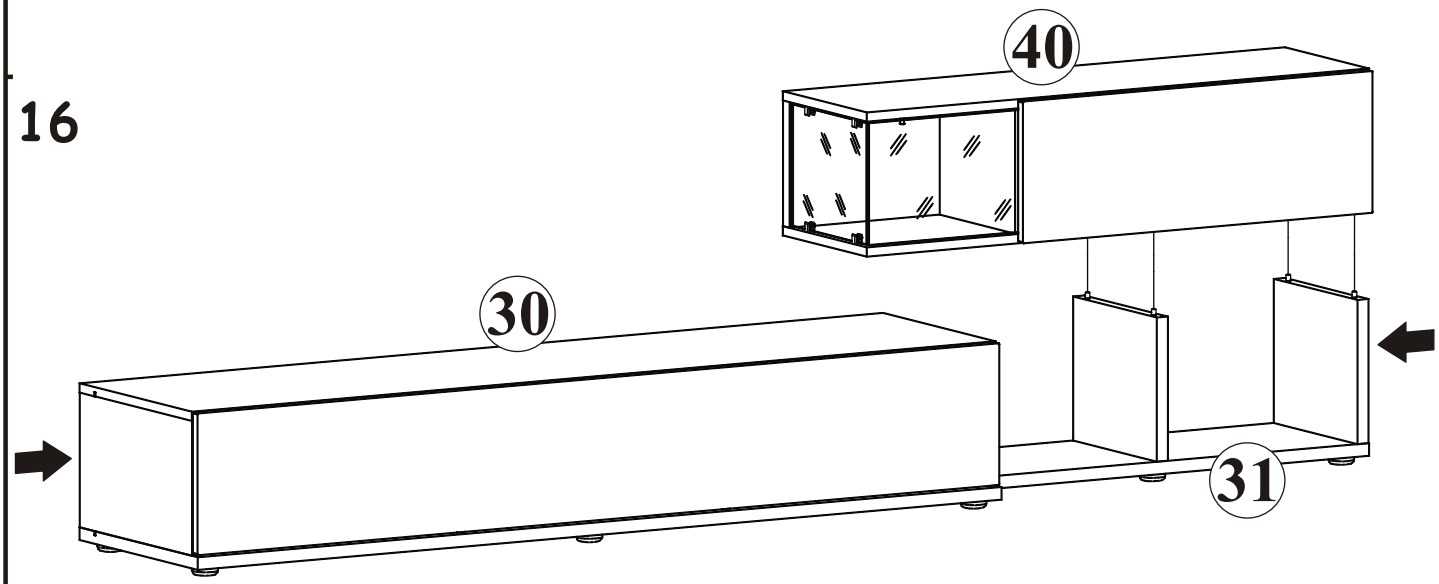

17

L1	KR1	D10	UP6
x1	x1	x2	x2
		USØ3,5x13	UPØ4x30

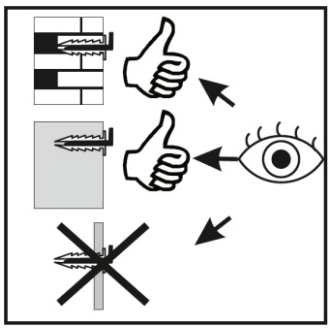

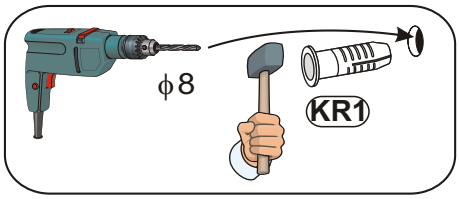

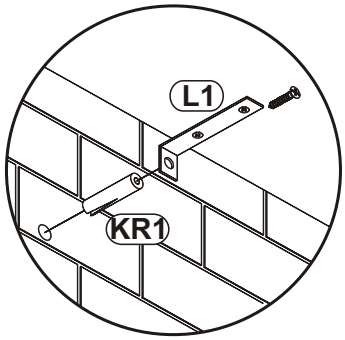

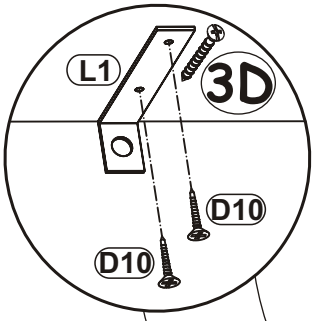

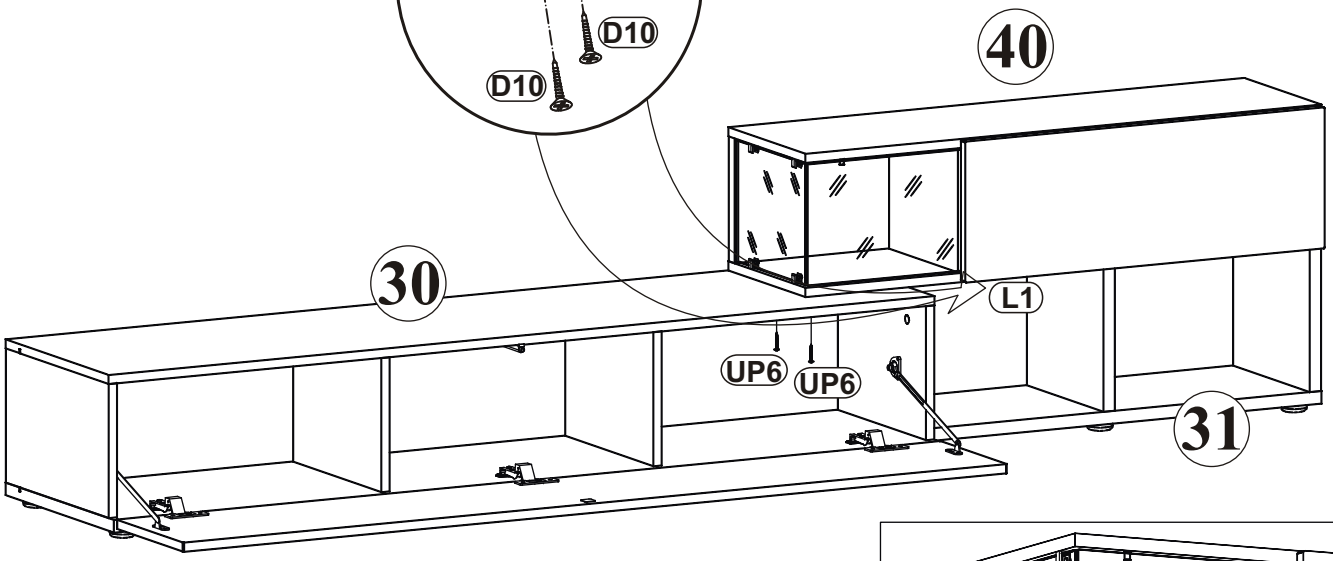

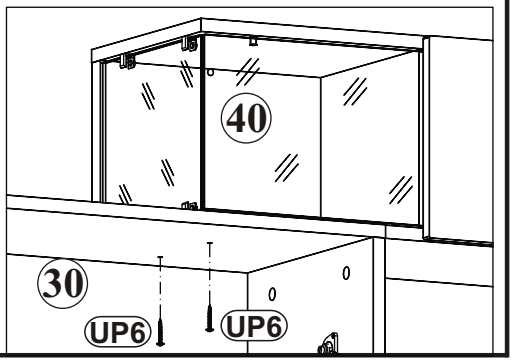

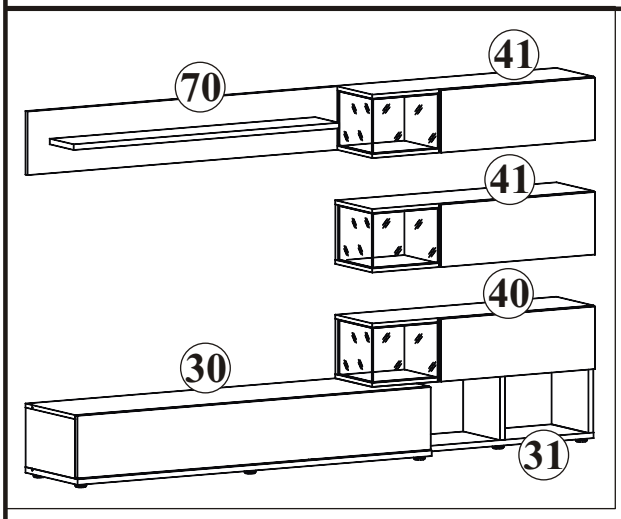

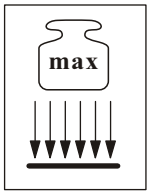

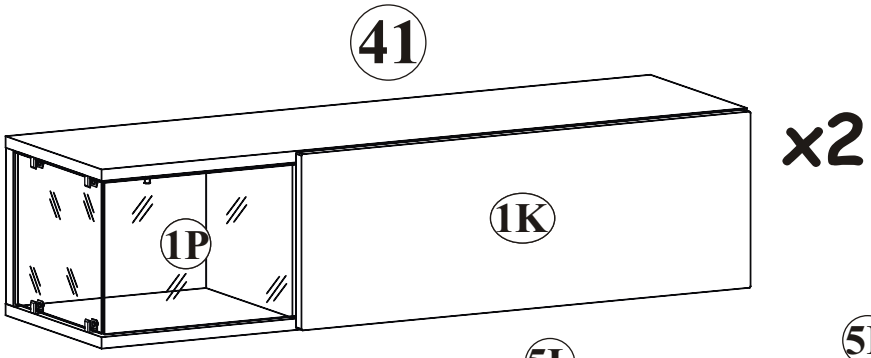

x2

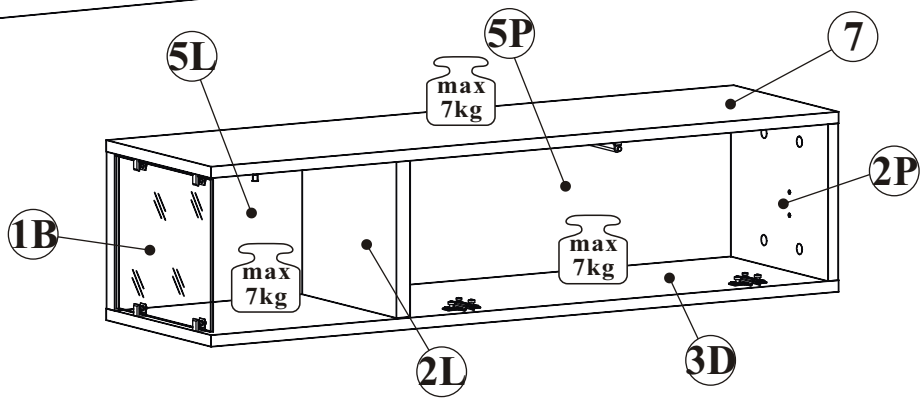

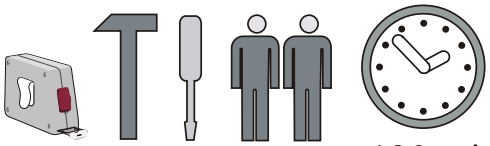

120 min

NO	Dim.			Col.-No	Qty
1K	696	246	16	3 / 3.	2
1P	212	318	4	3 / 3.	2
1B	212	255	4	3 / 3.	2
2L	277	218	22	3 / 3.	2
2P	218	284	16	3 / 3.	2
3D	1000	284	16	3 / 3.	2
5L	299	218	22	3 / 3.	2
5P	230	674	3	3 / 3.	2
7	1000	284	16	3 / 3.	2

A1 x24 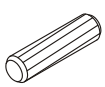 ø8x36	B4 x24 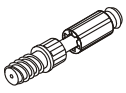	B5 x8 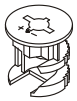 Ø15x12	B16 x16 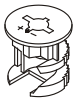 Ø15x16	G5 x24	OD2 x1 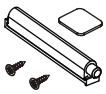
E21 x4 Ø35 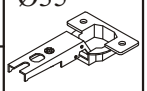 H=0	E2 x4 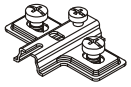 H=0	D10 x18 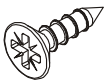 USØ3,5x13	G21 x2 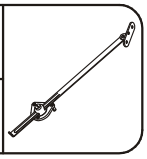	D7 x6 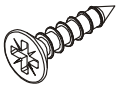 USØ3x16	S1 x12 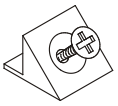
ZXL x2 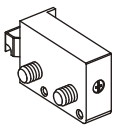	ZXP x2 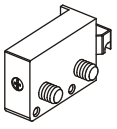	G20 x2 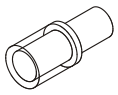	G32 x8 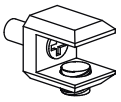	P2 x6	UP13 x6 UPØ3x16
KR2 x4 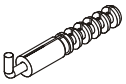	G2 x1				

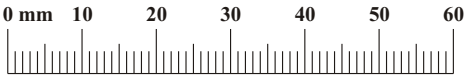

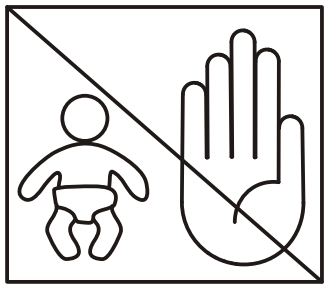
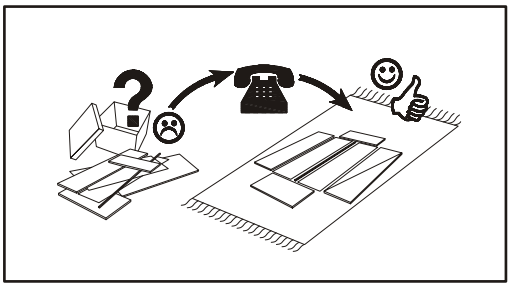
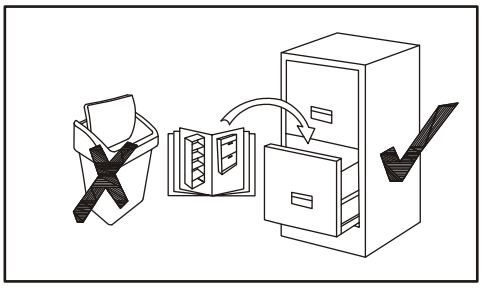
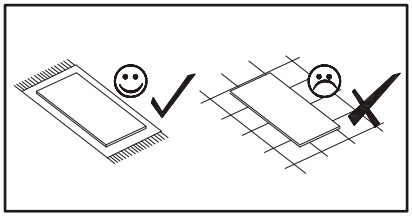
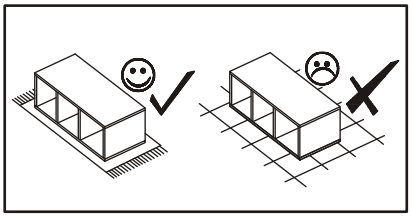
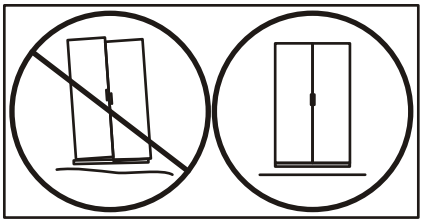
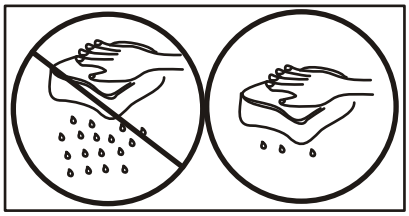

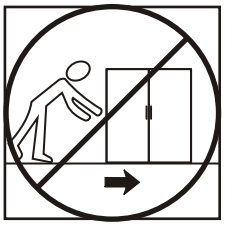
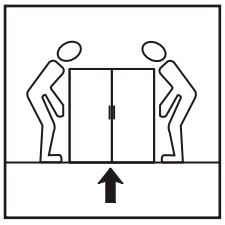
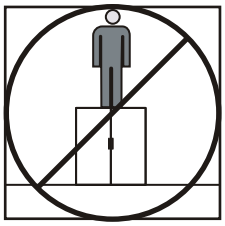
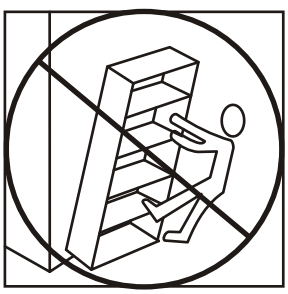
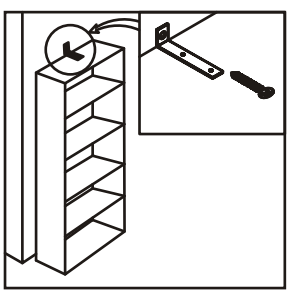

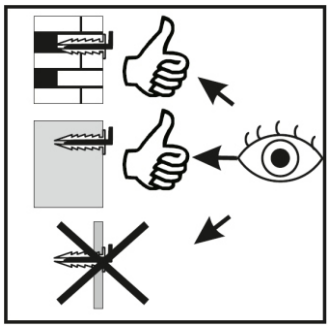

1

ZXL	A1	B16
x2	x16	x16
	ø8x36	Ø15x16

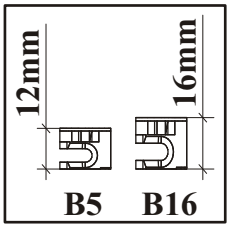

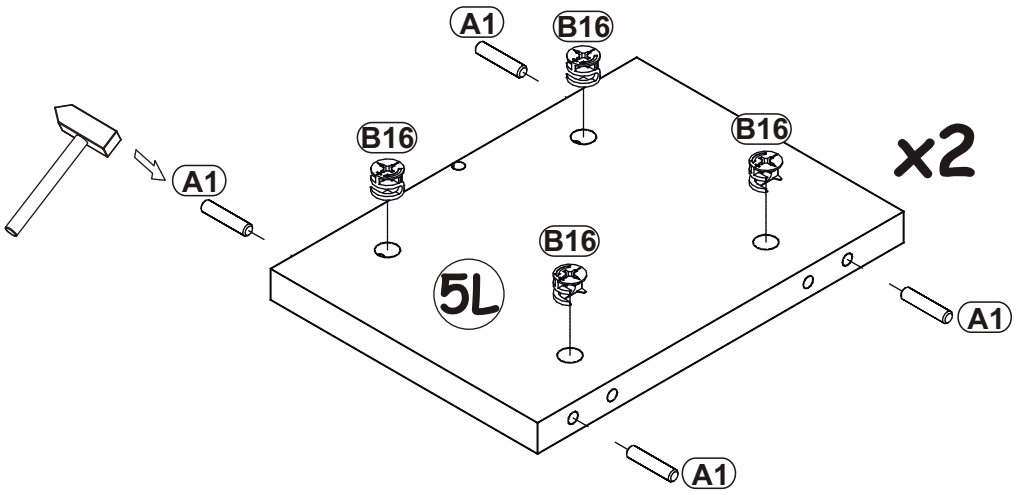

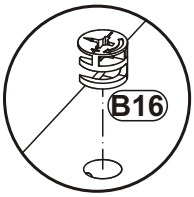

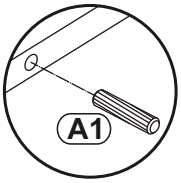

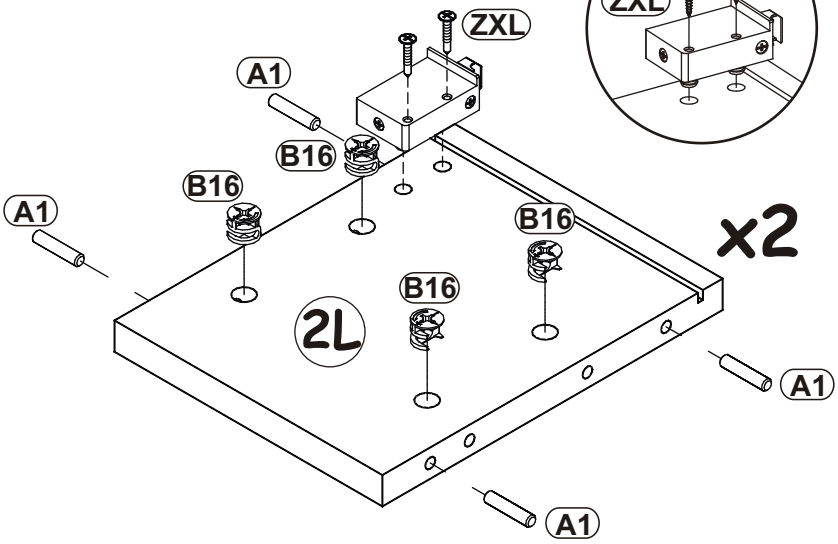

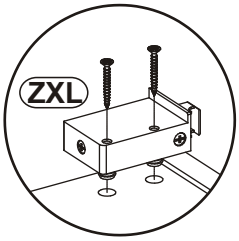

2

ZXP	A1	B5
x2	x8	x8
	ø8x36	Ø15x12

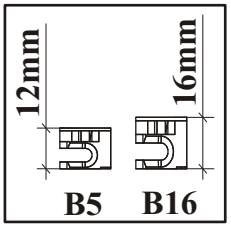

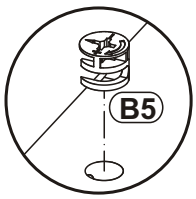

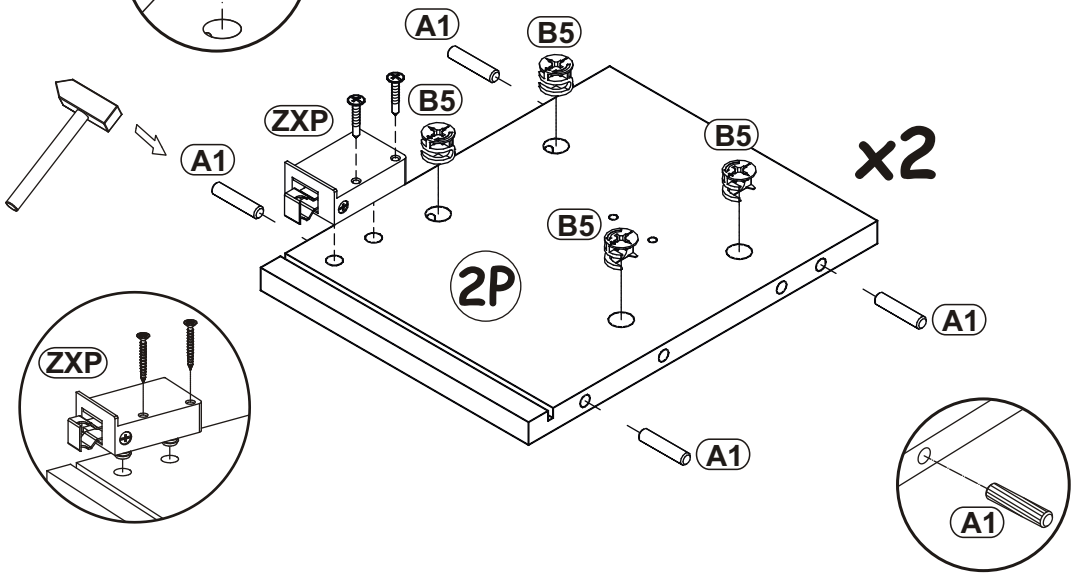

3

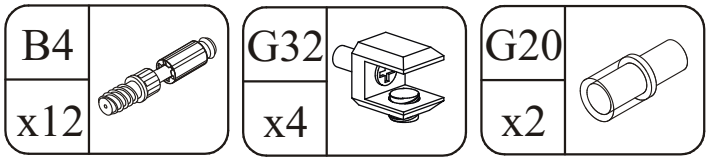
B4
x12
G32
x4
G20
x2

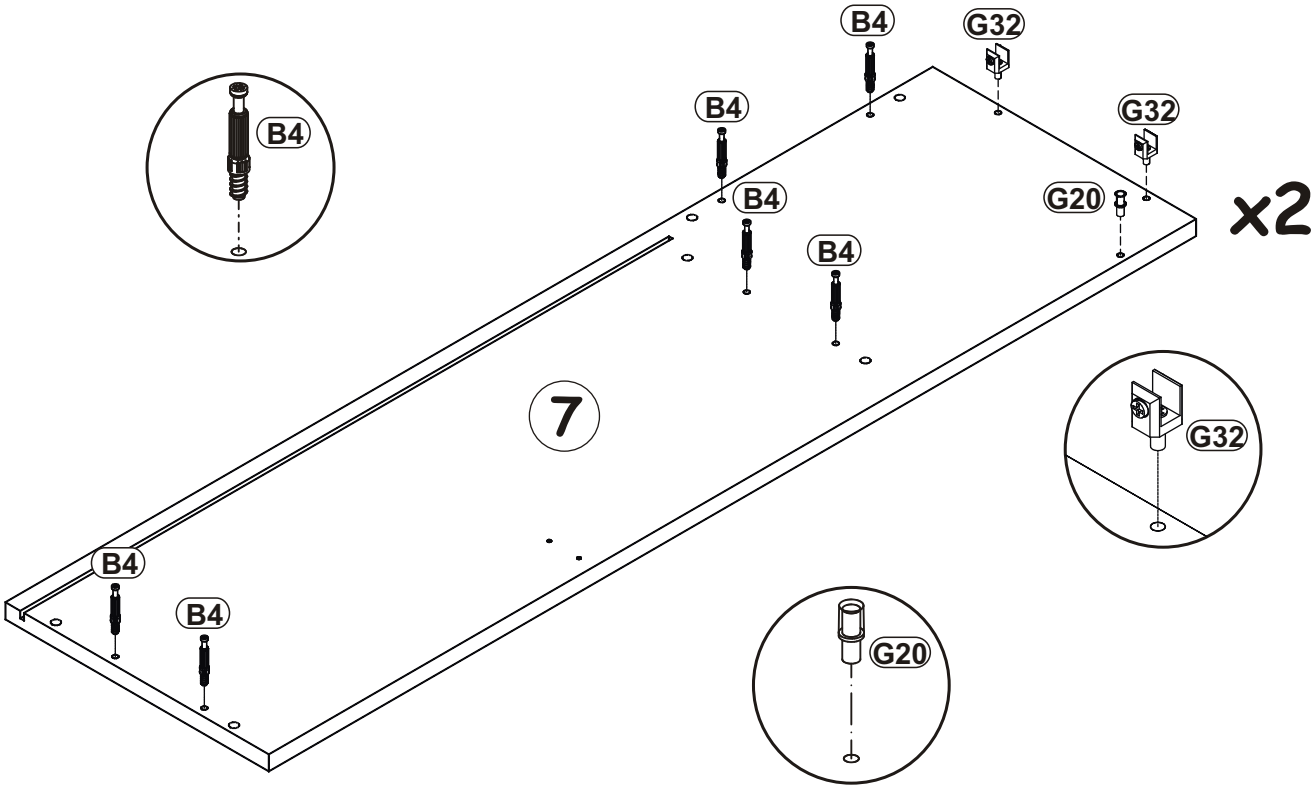
B4
G32
B4
G32
B4
G20
x2
B4
7
G32
B4
B4
G20

4

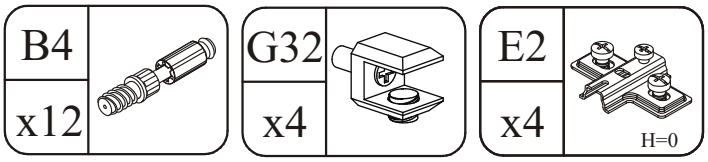
B4
x12
G32
x4
E2
x4
H=0

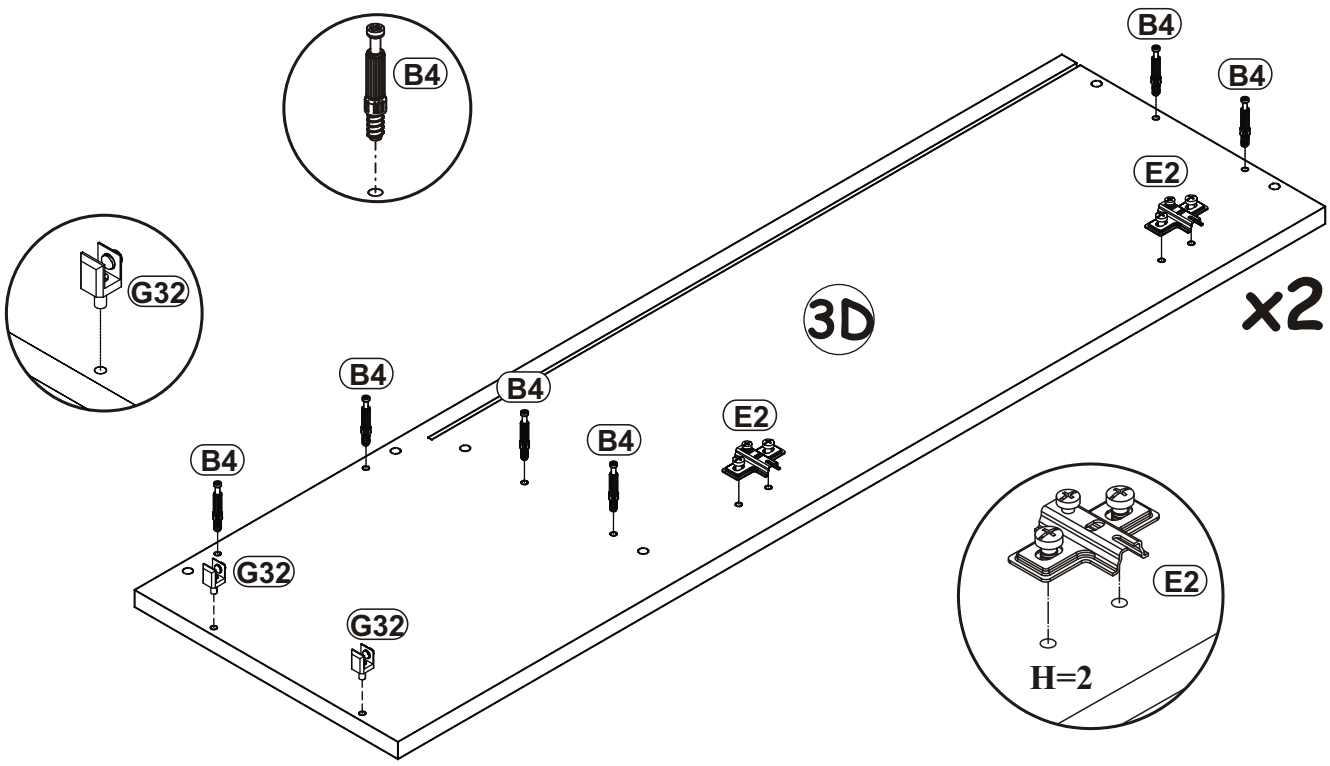
B4
B4
B4
E2
G32
3D
x2
B4
B4
E2
B4
B4
G32
G32
E2
H=2

5

E21	Ø35	D10	
x4	H=0	x8	USØ3,5x13

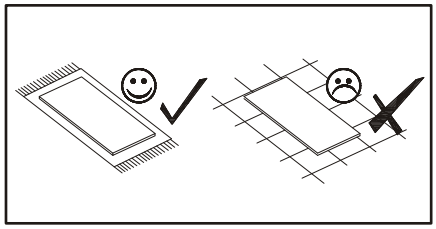

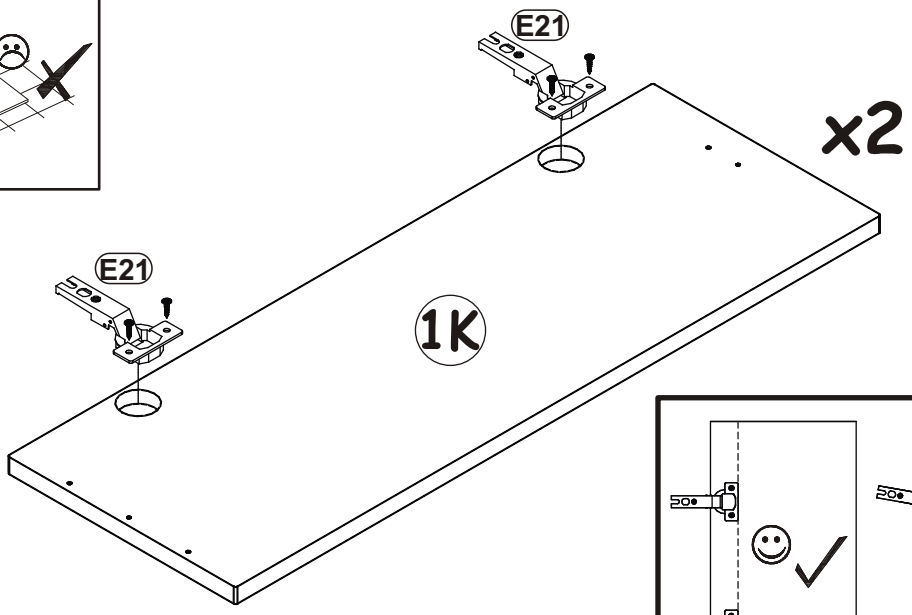

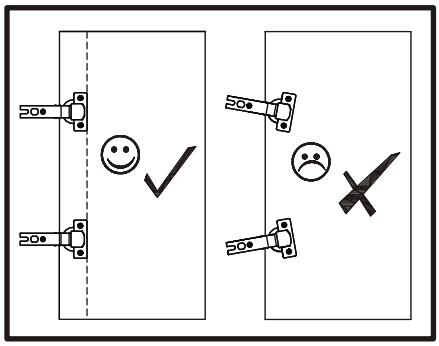

6

G5	
x12	

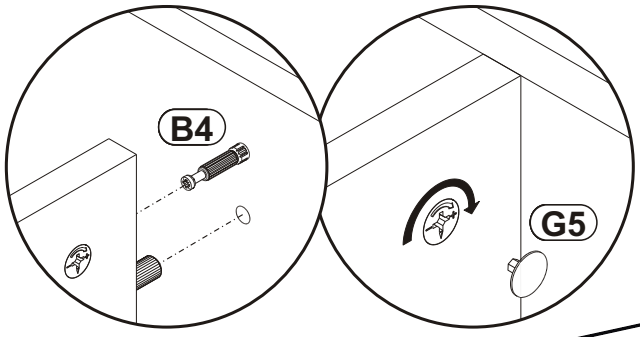

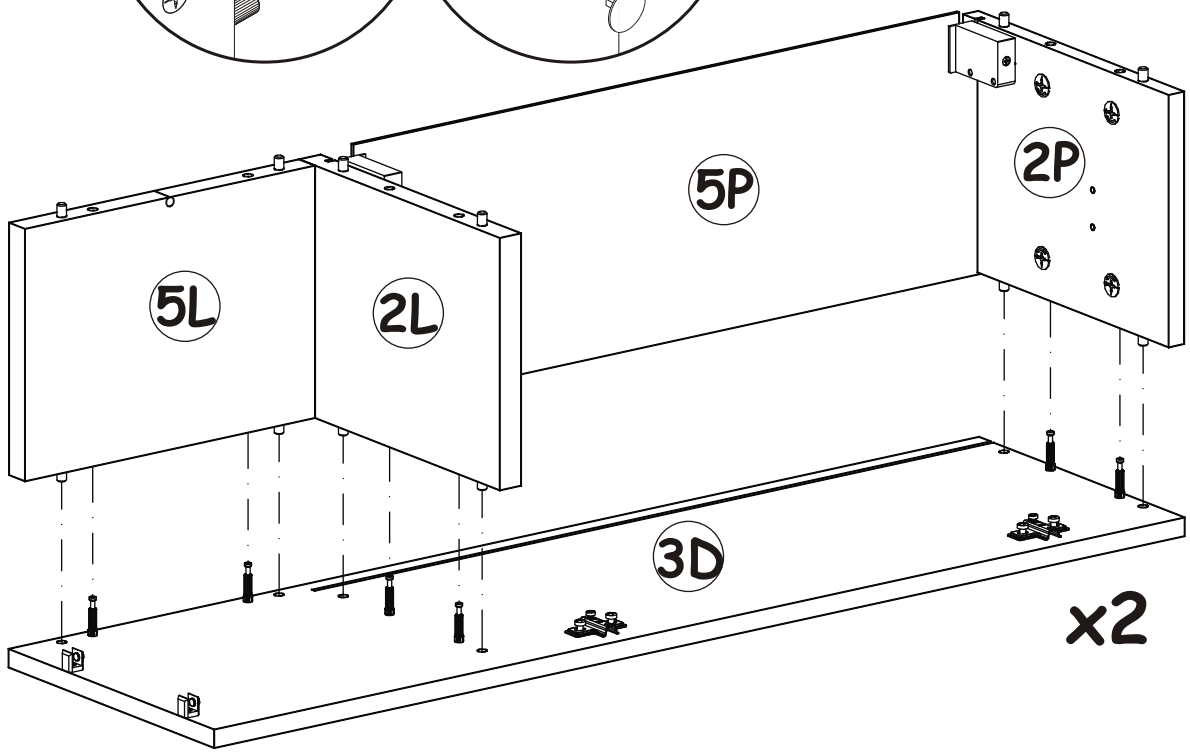

7

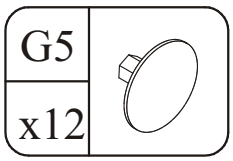

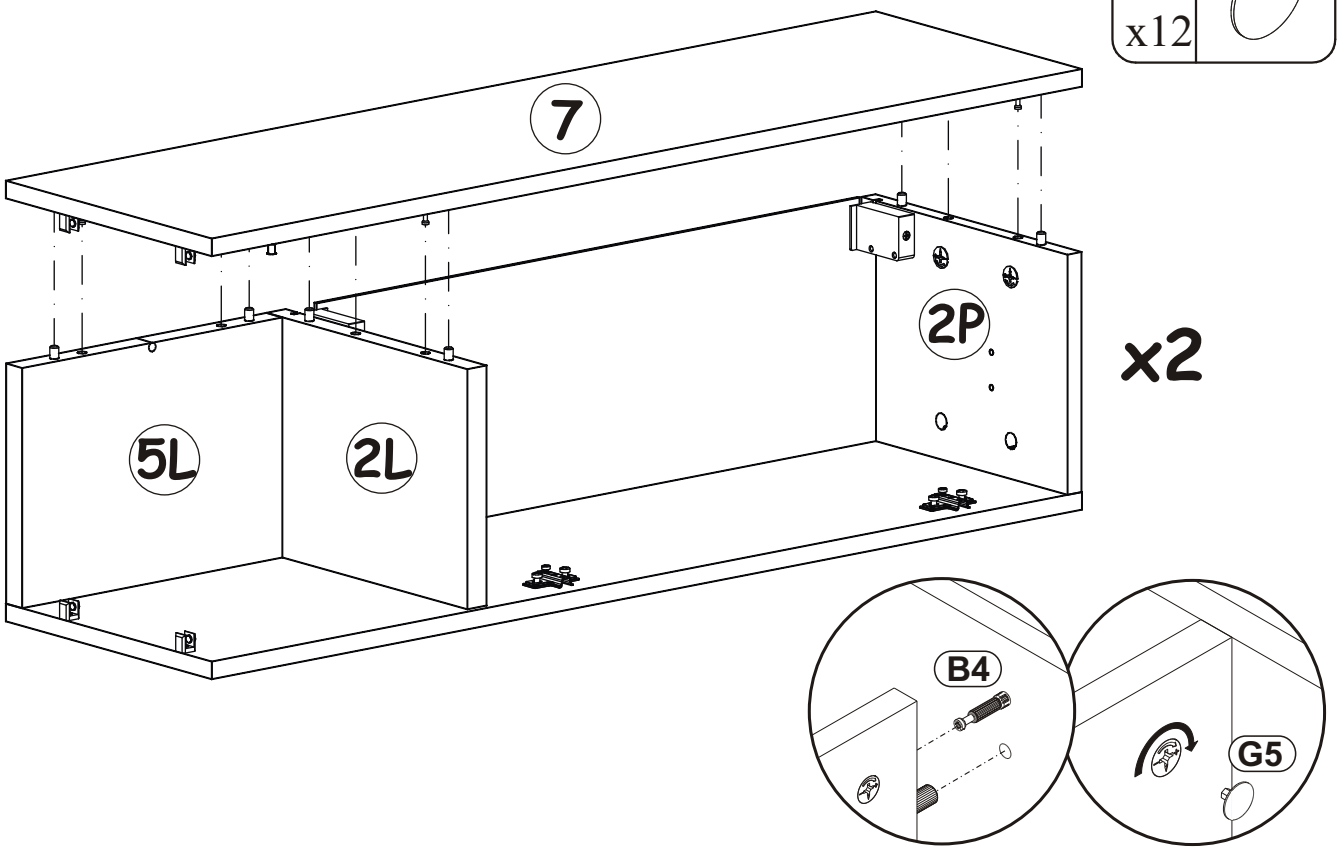

8

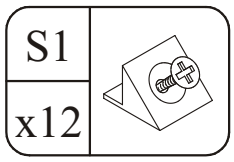

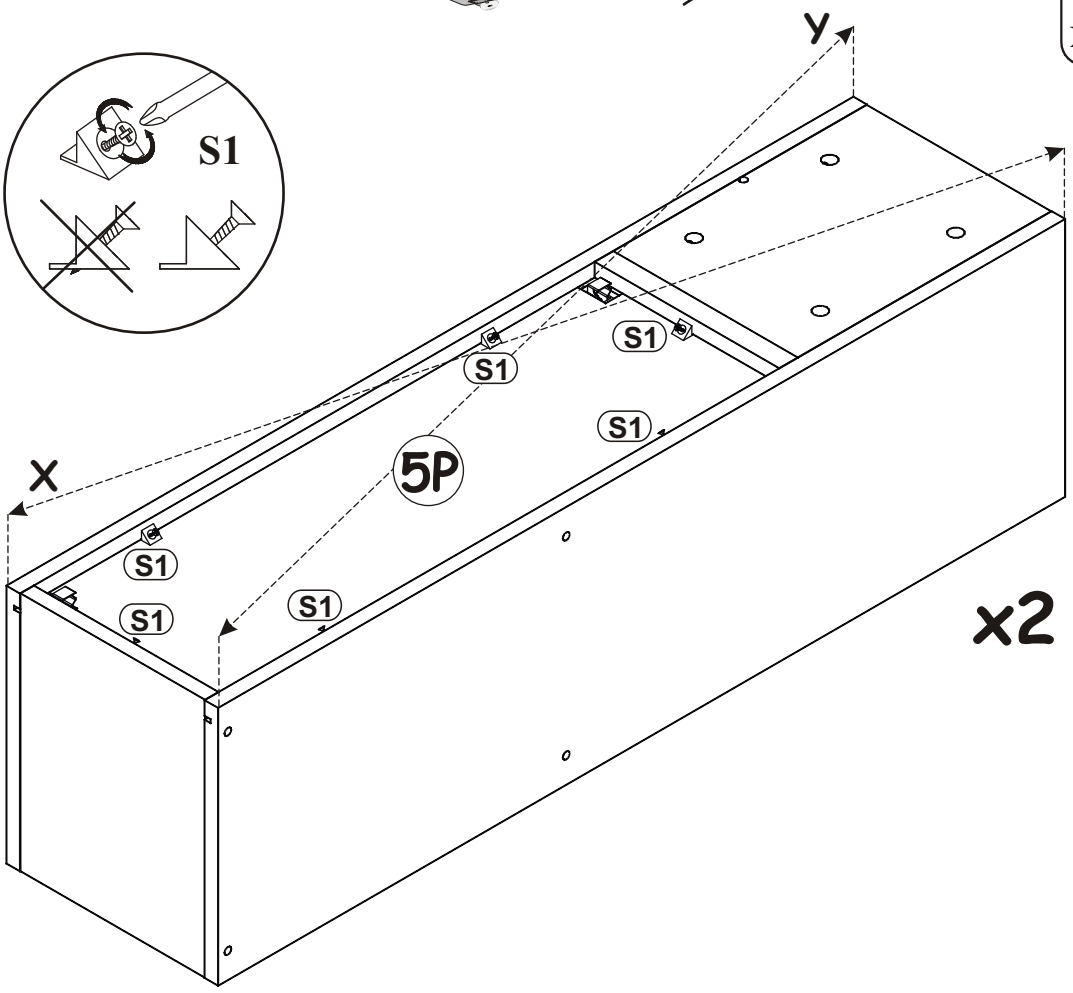

9

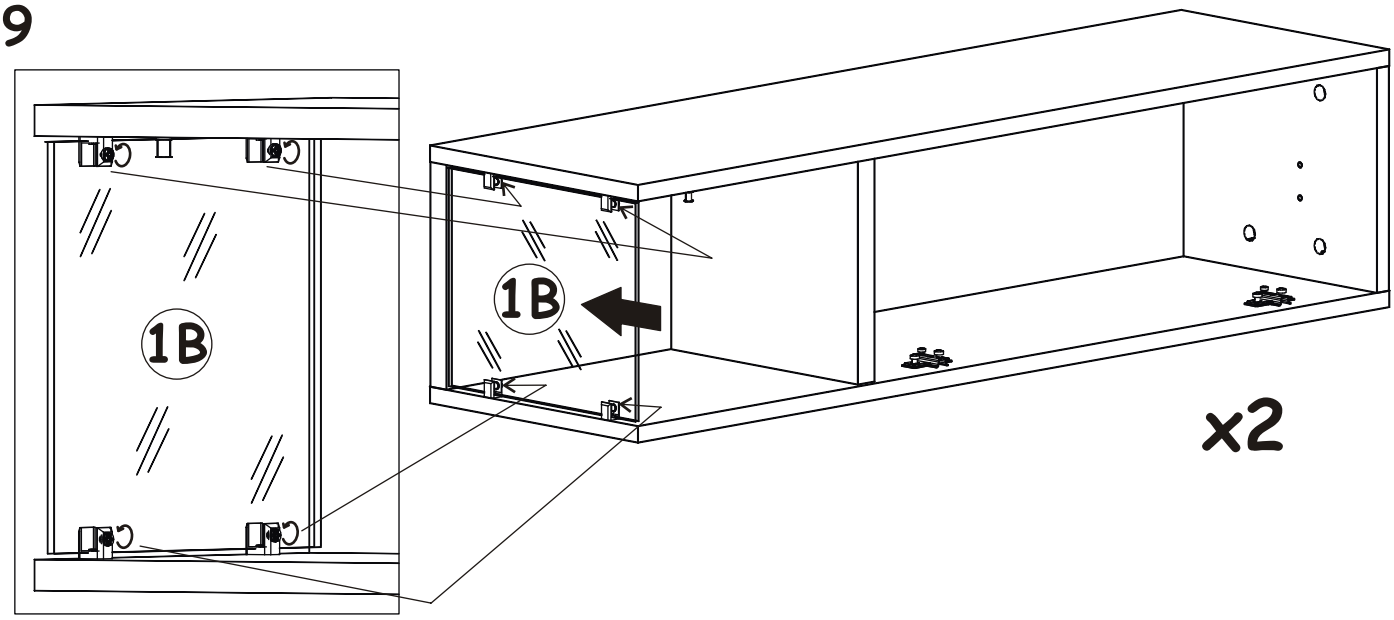

10

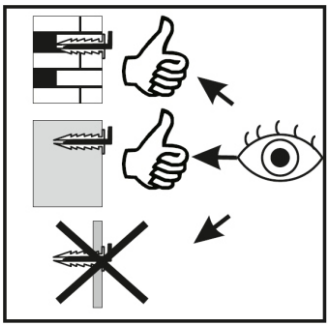

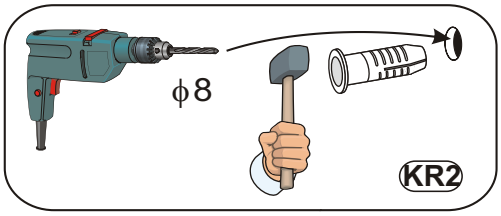

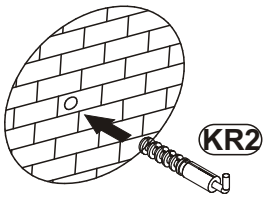

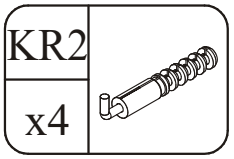

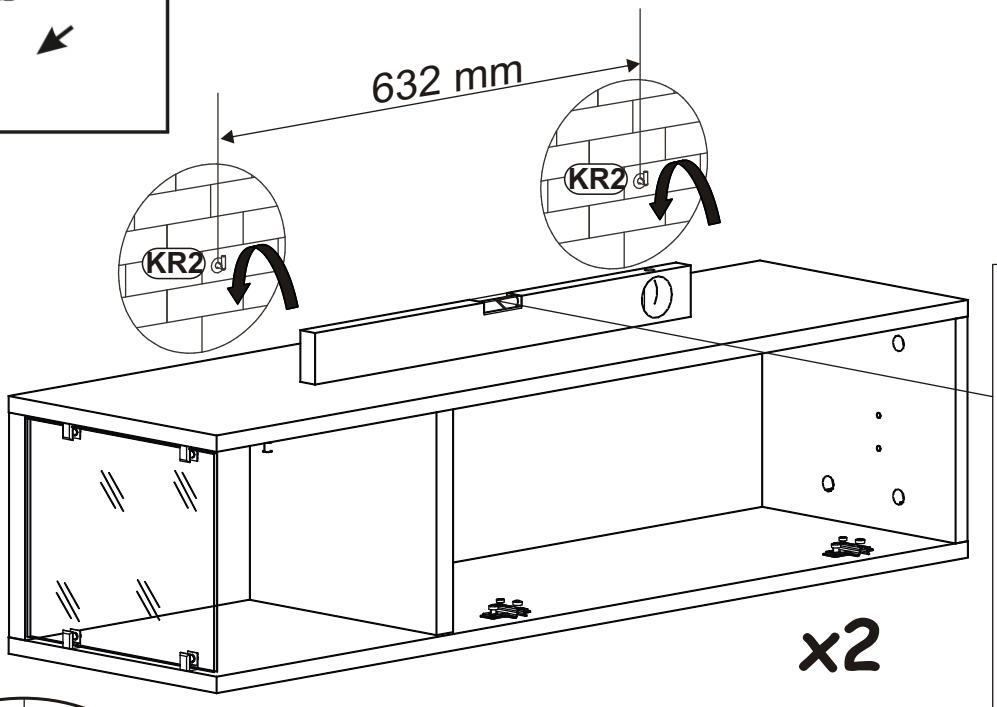

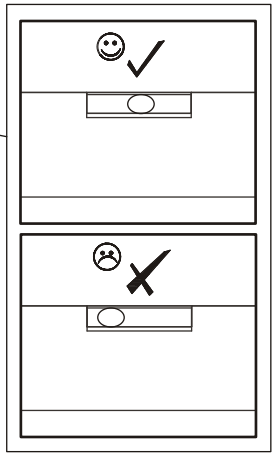

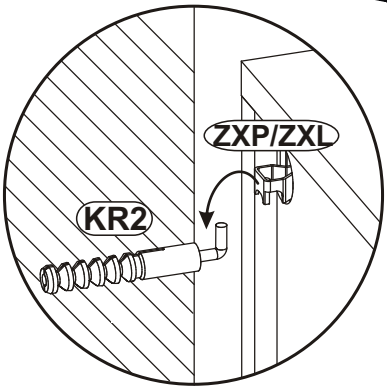

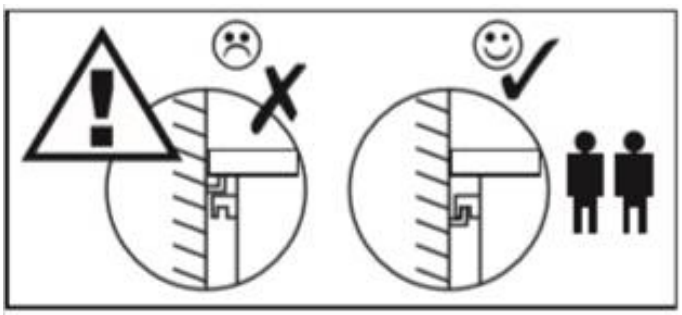

11

OD2		D10	
x2	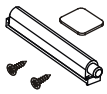	x4	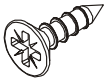 USØ3,5x13

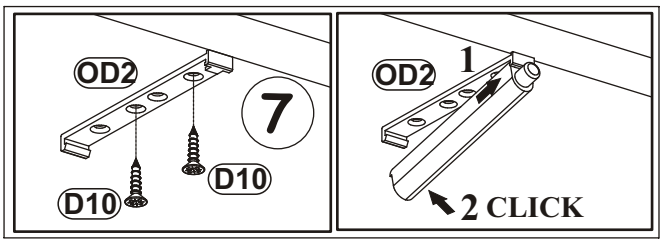

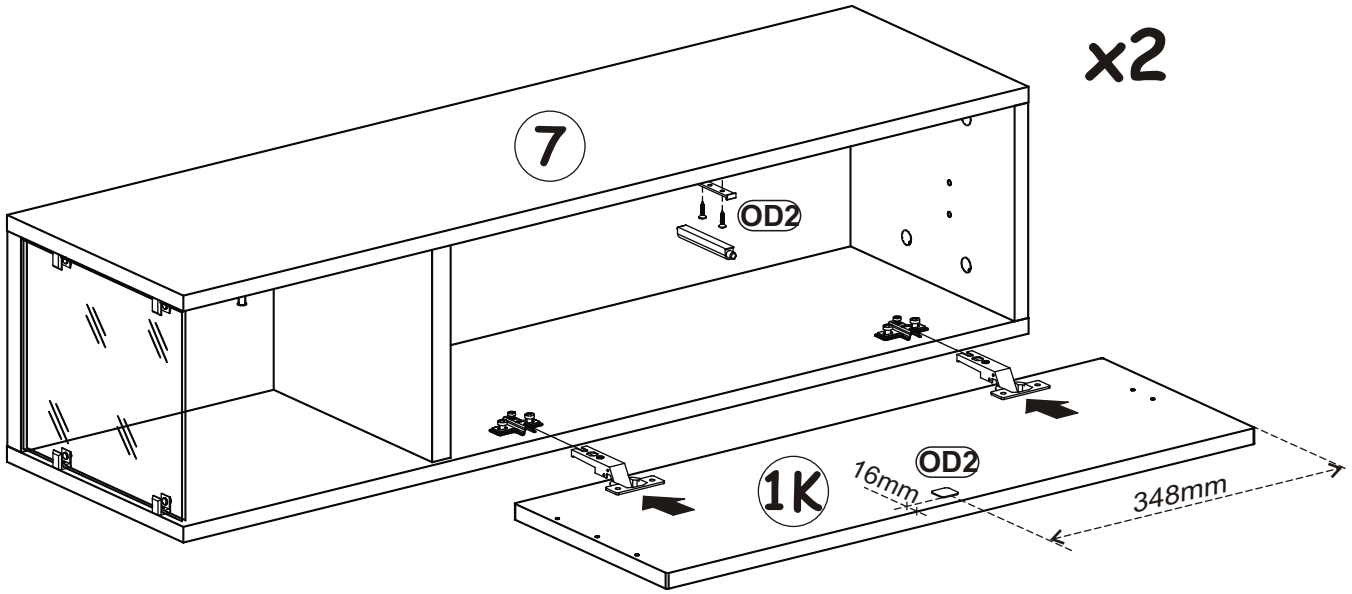

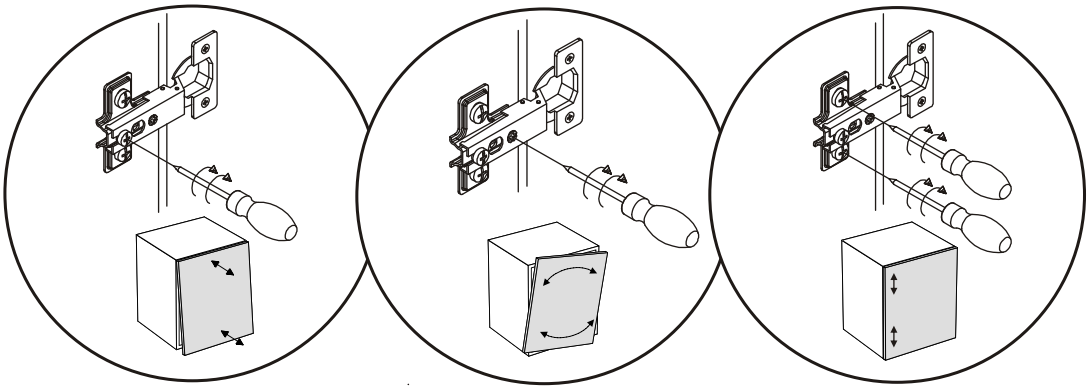

12

G21	D7	D10
x2	x6	x6
	USØ3x16	USØ3,5x13

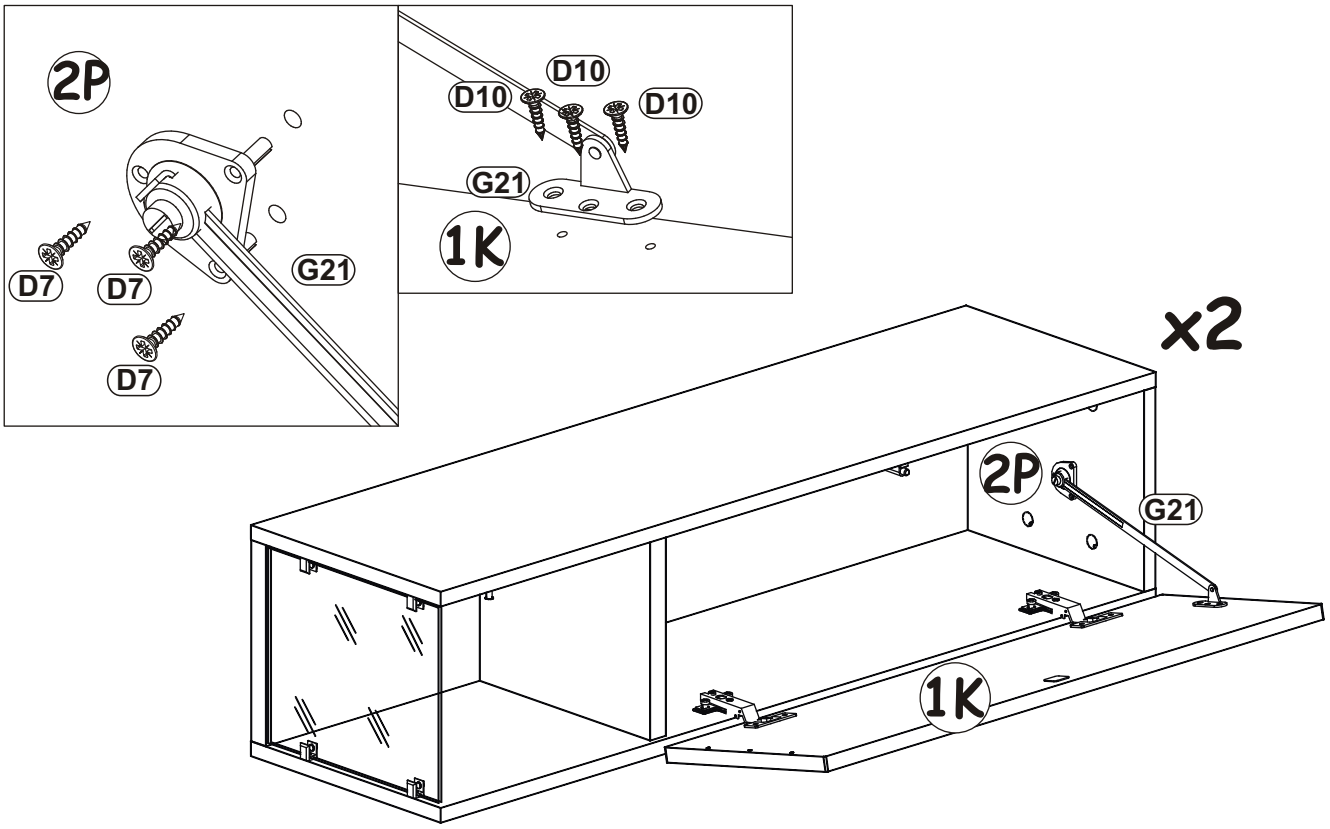

13
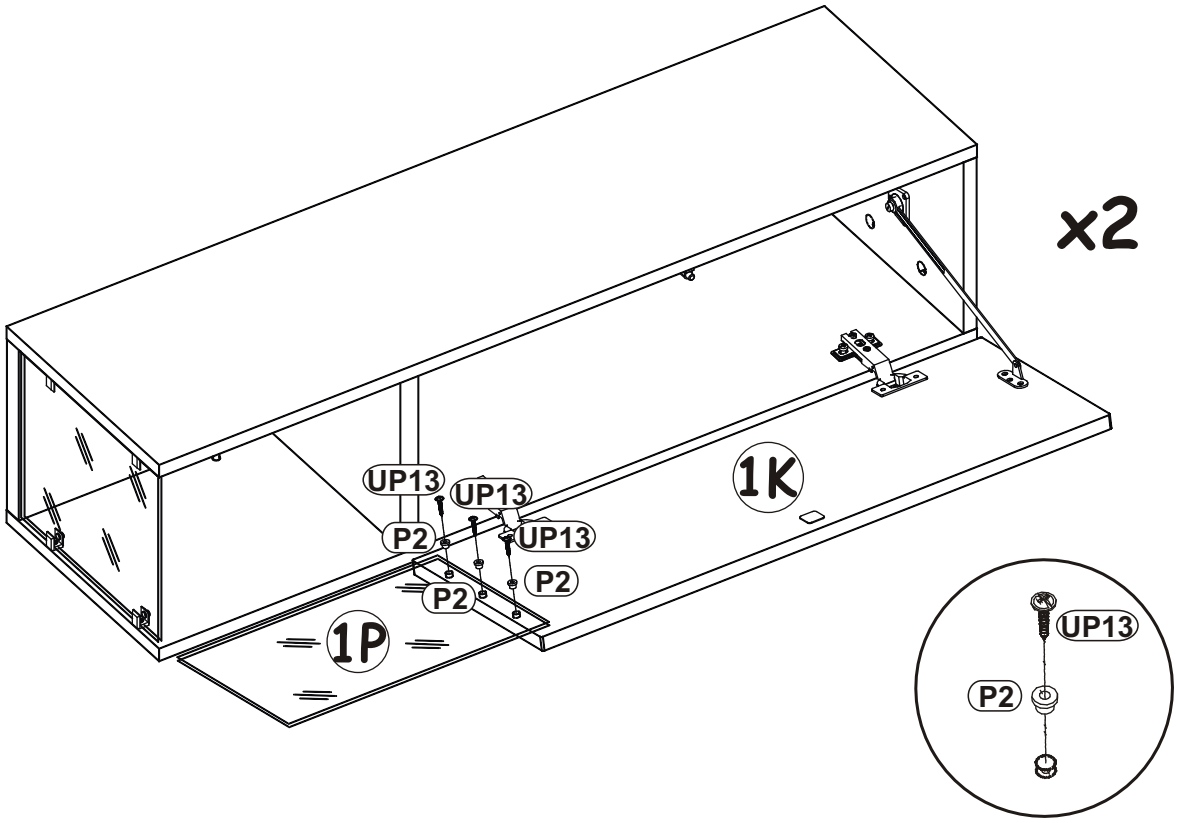
P2	UP13
x6	x6
	UPØ3x16